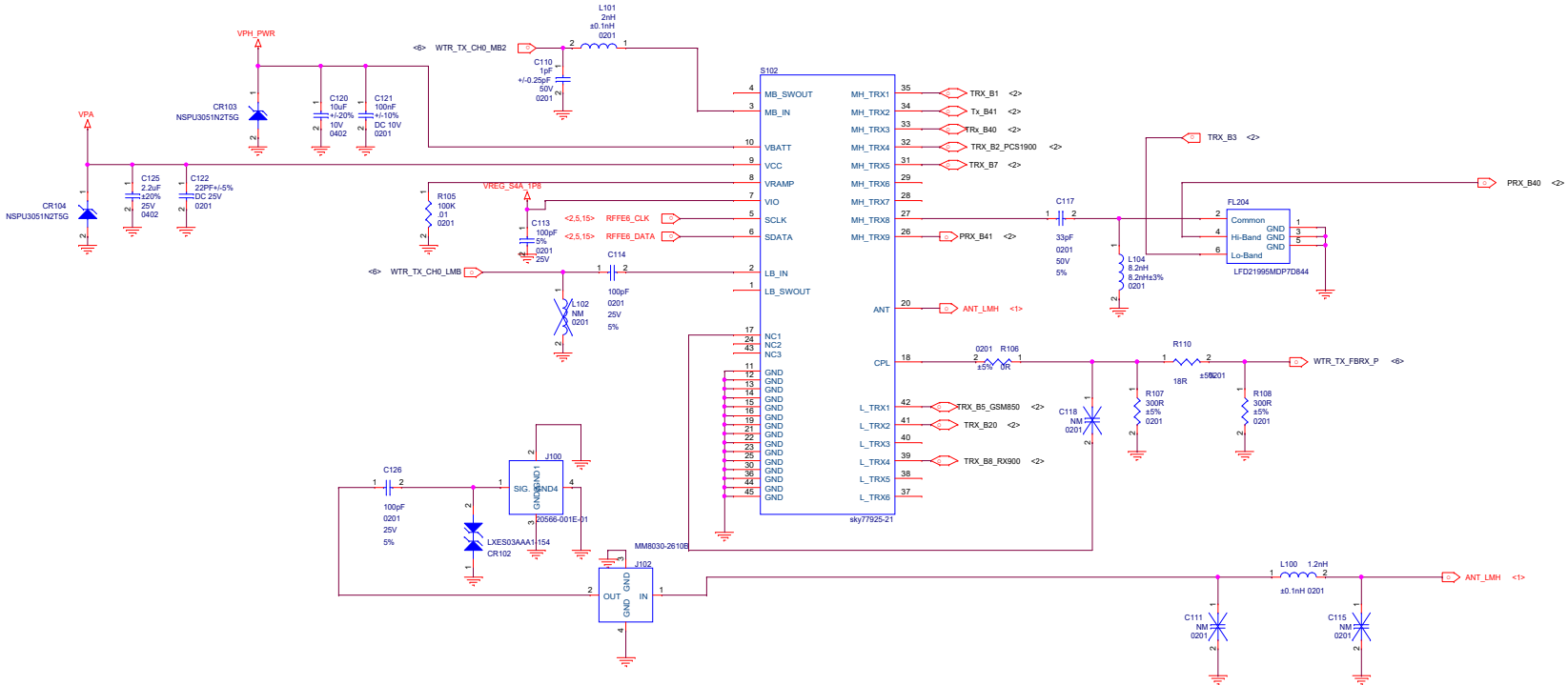

DRX_ANT

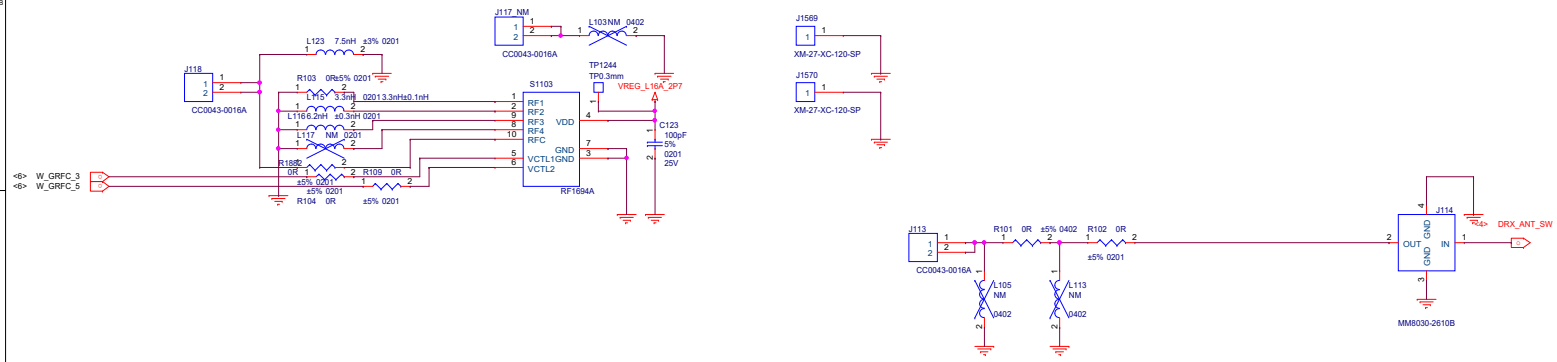

Title	E10	
Size A2	Document Number ANT CON&COUPLER&SWITCH	Rev P0
Date: Friday, May 11, 2018	Sheet 1 of 41	

MMMB PA

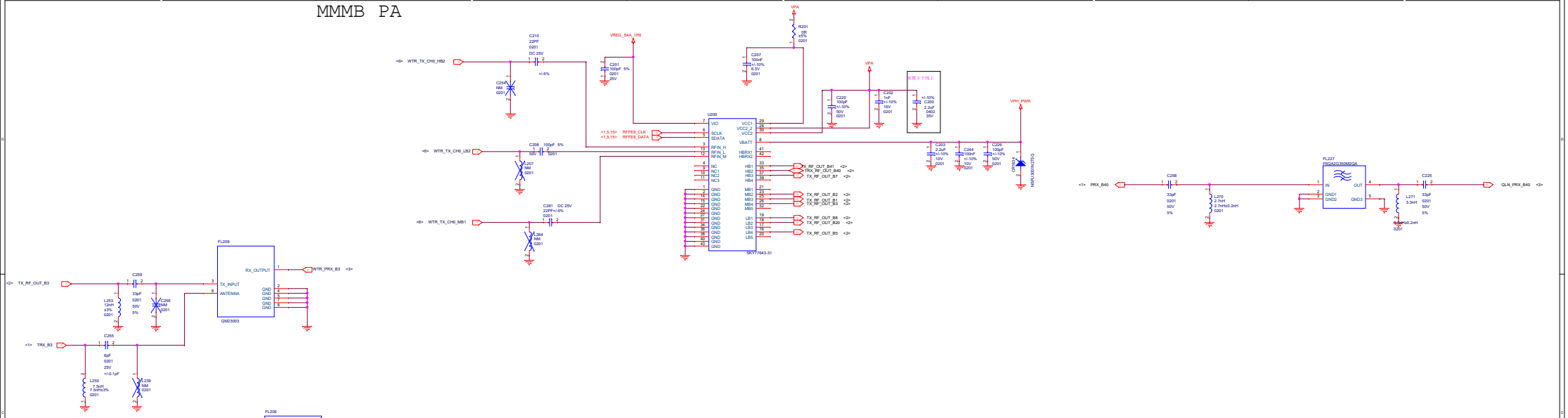

B1&B3

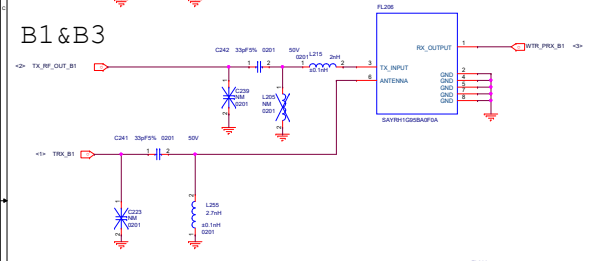

B40

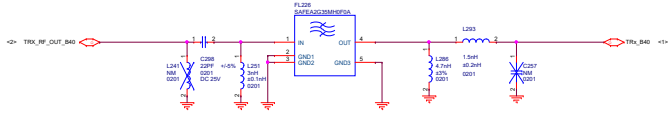

TX B41

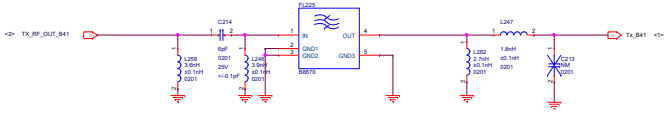

PRX B41

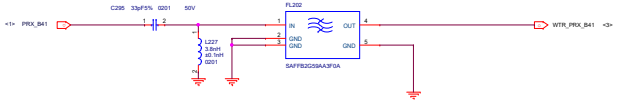

B2&B5&B8

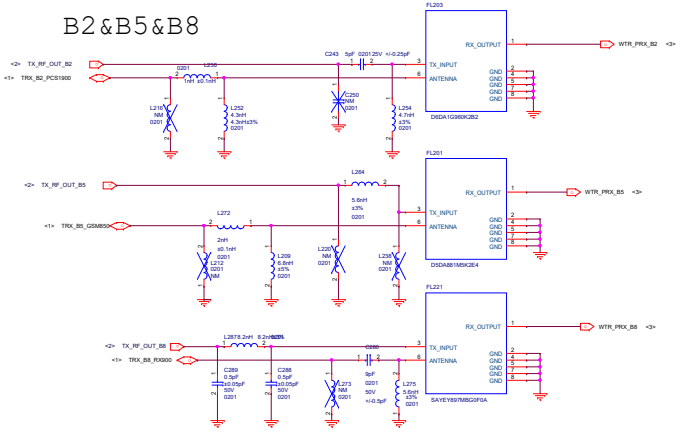

TX B20

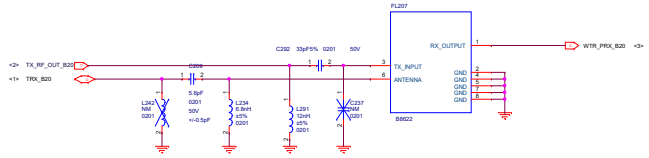

B7

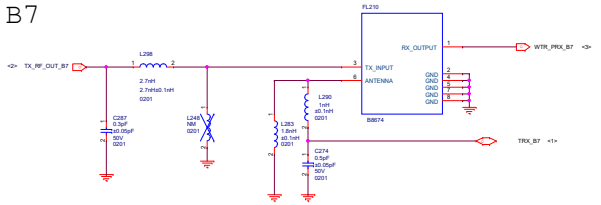

Thermal

Title:	E10		
Size: A1	Document Number: <Doc>		Rev: <RevCode>
Date: Friday, May 11, 2018		Sheet 2 of 41	

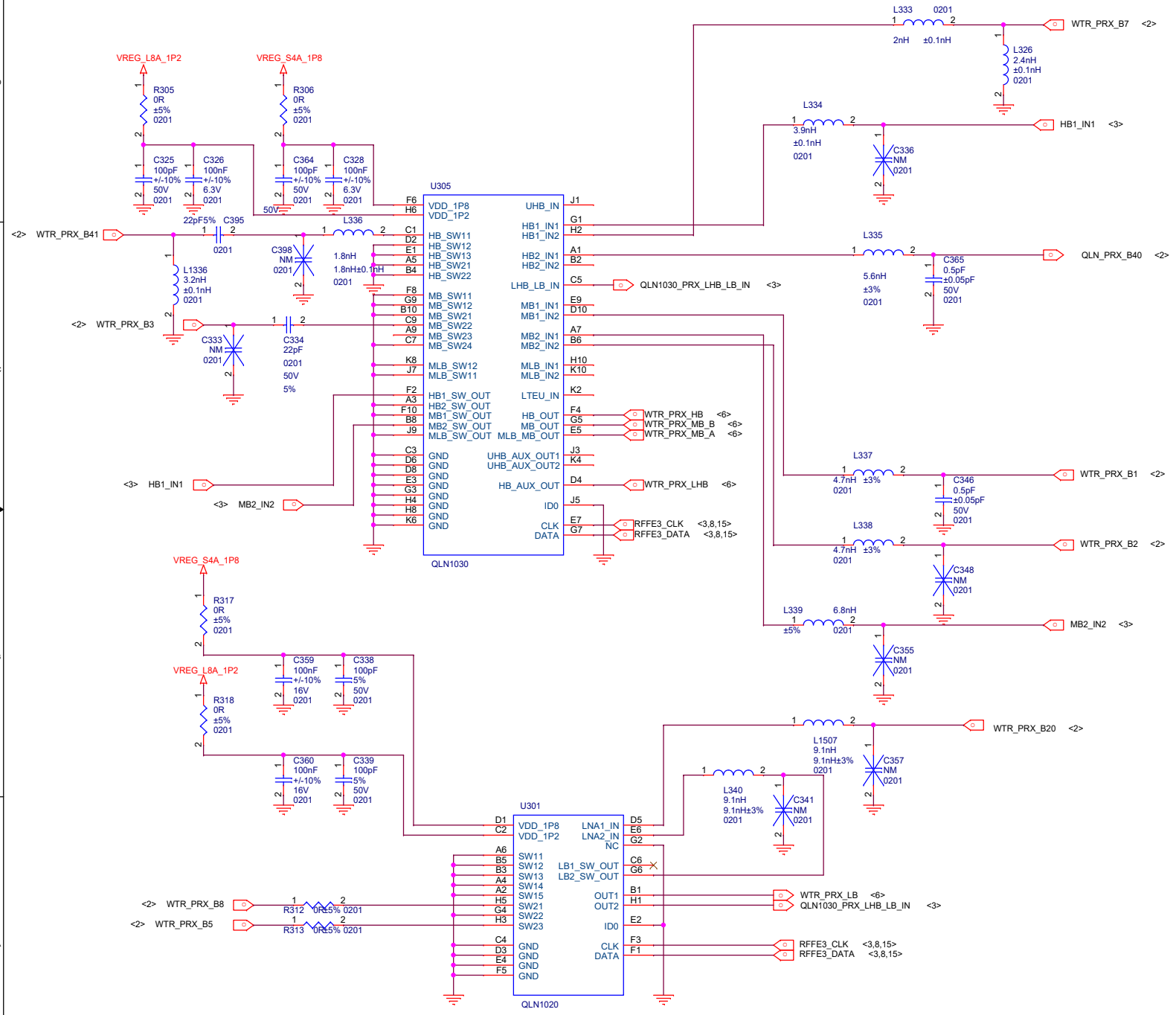

Title	E10	
Size A3	Document Number BAND7&39&40&41	Rev P0
Date: Friday, May 11, 2018	Sheet 3 of 41	

DRX

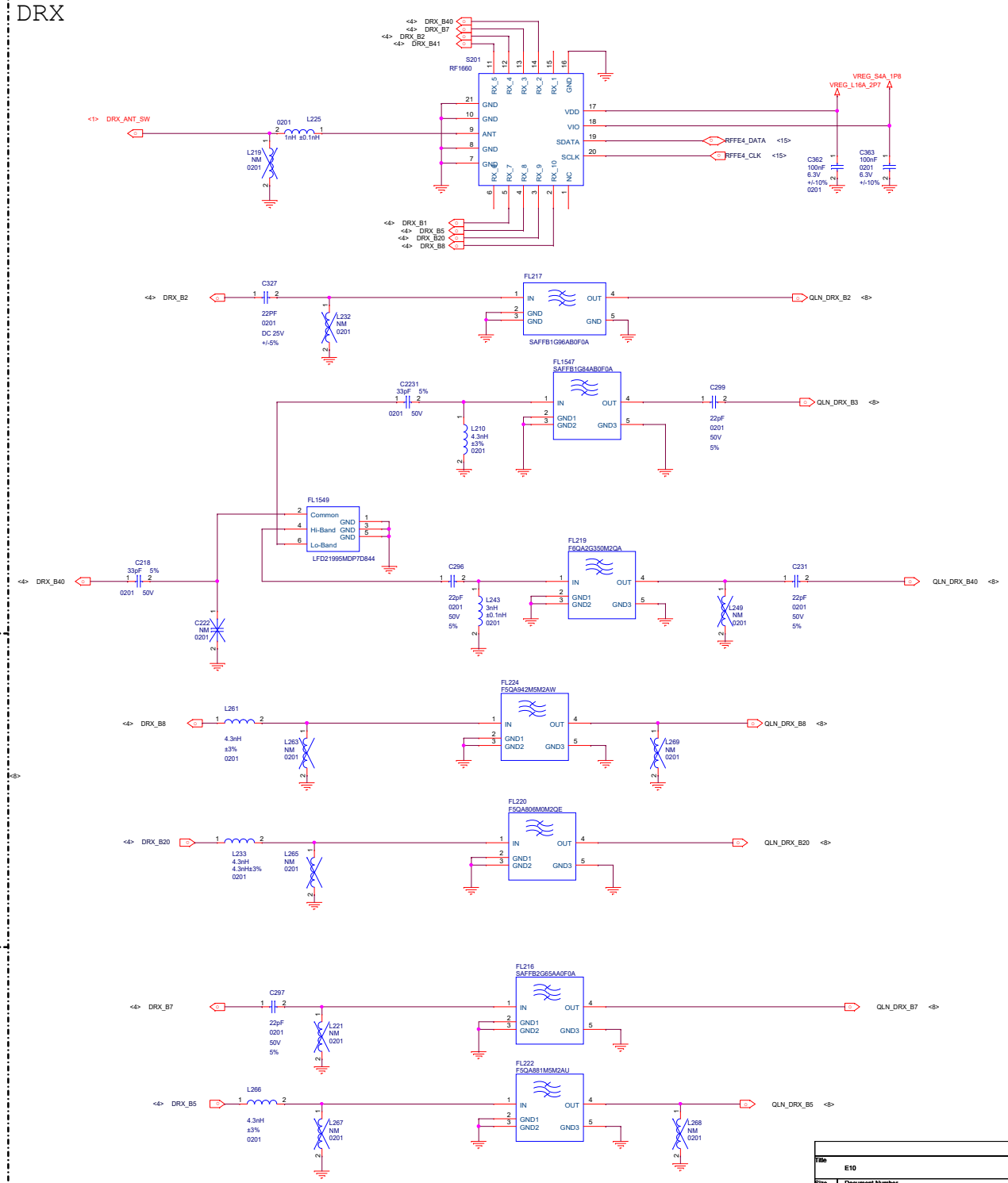

DRX B41

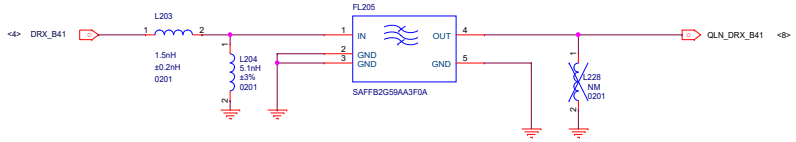

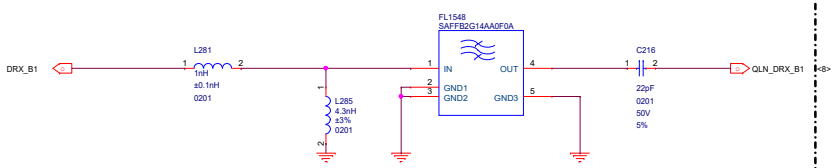

Title	E10		
Size A2	Document Number FILTERS&GSM1800&DRX_B		Rev P0
Date: Friday, May 11, 2018	Sheet 4 of 41		

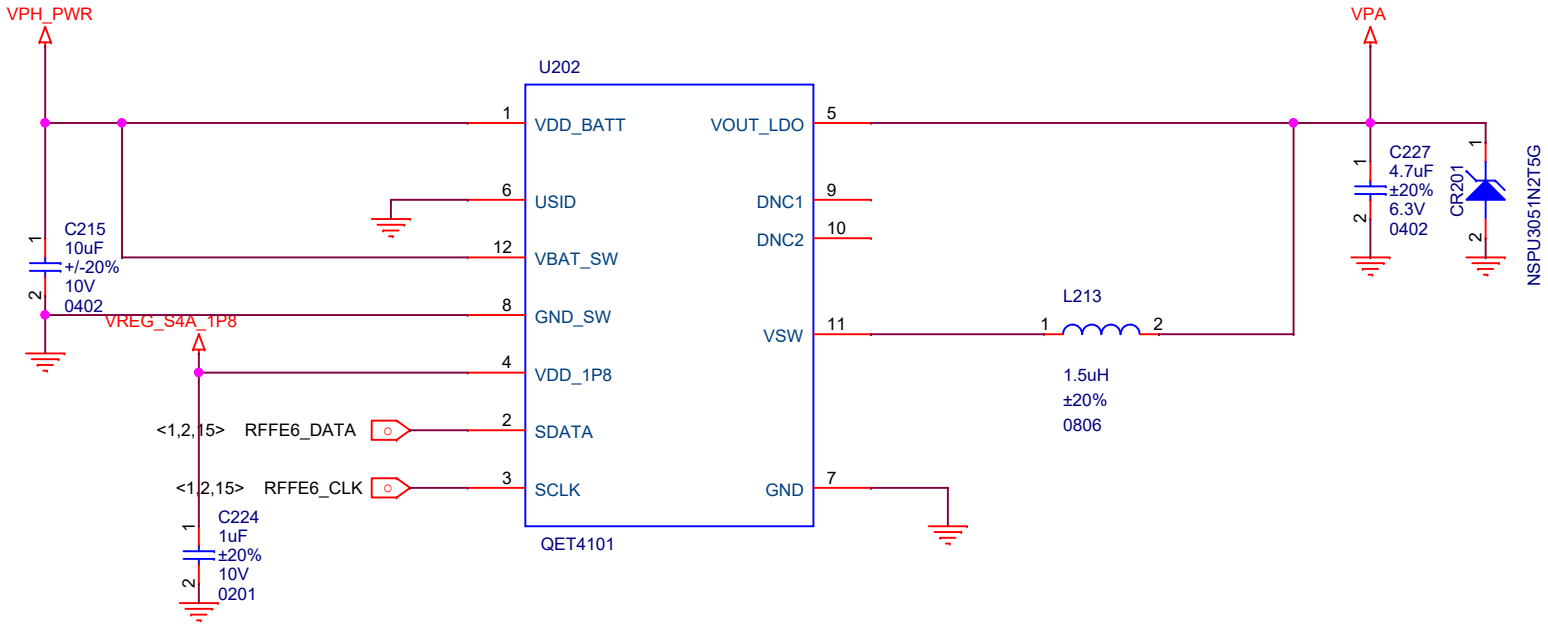

Title	E10	
Size A4	Document Number QET4101	Rev P0
Date: Friday, May 11, 2018	Sheet 5 of 41	

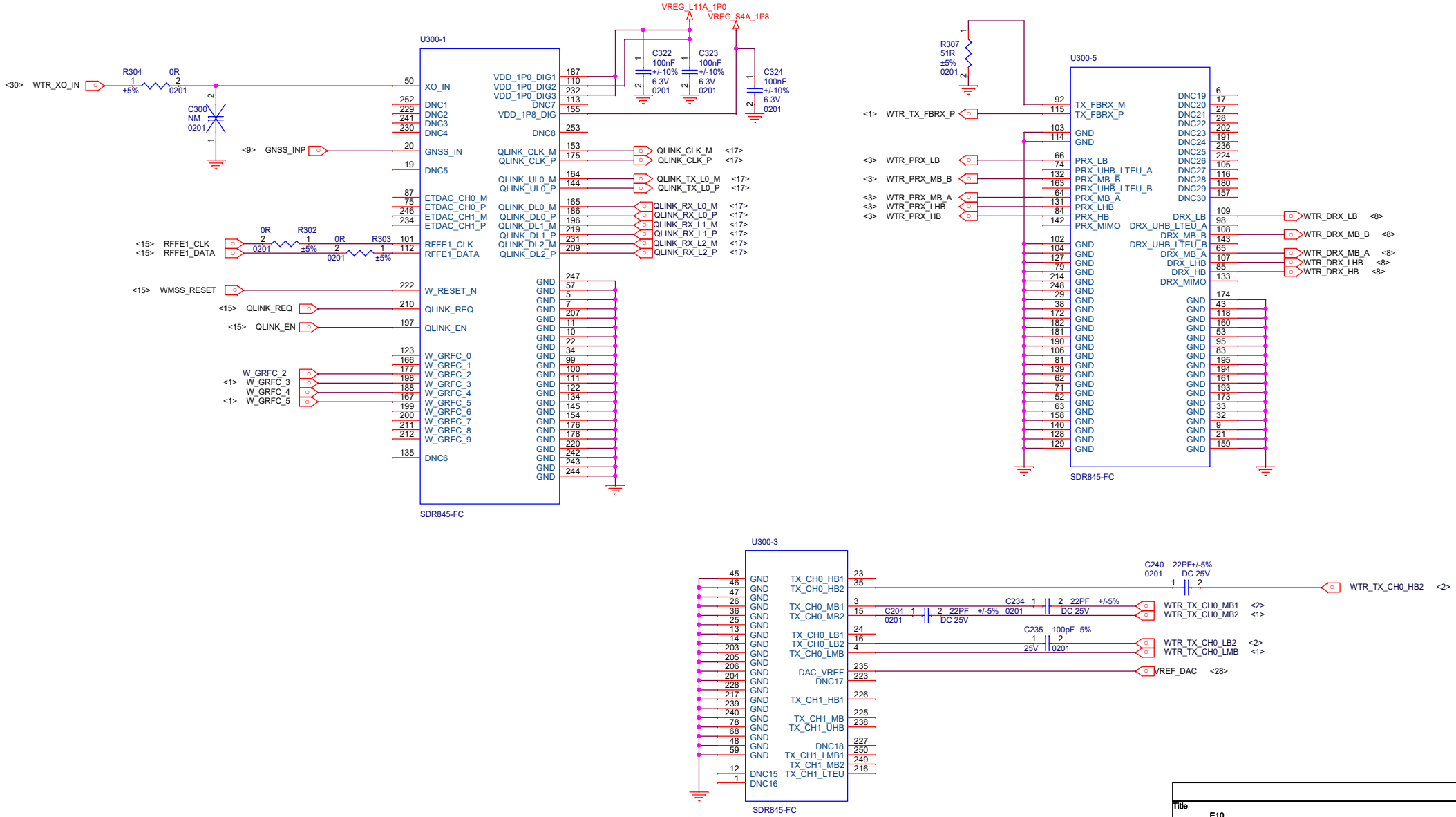

Title	E10	
Size A3	Document Number WTR5975 MSS	Rev P0
Date: Friday, May 11, 2018	Sheet 6 of 41	

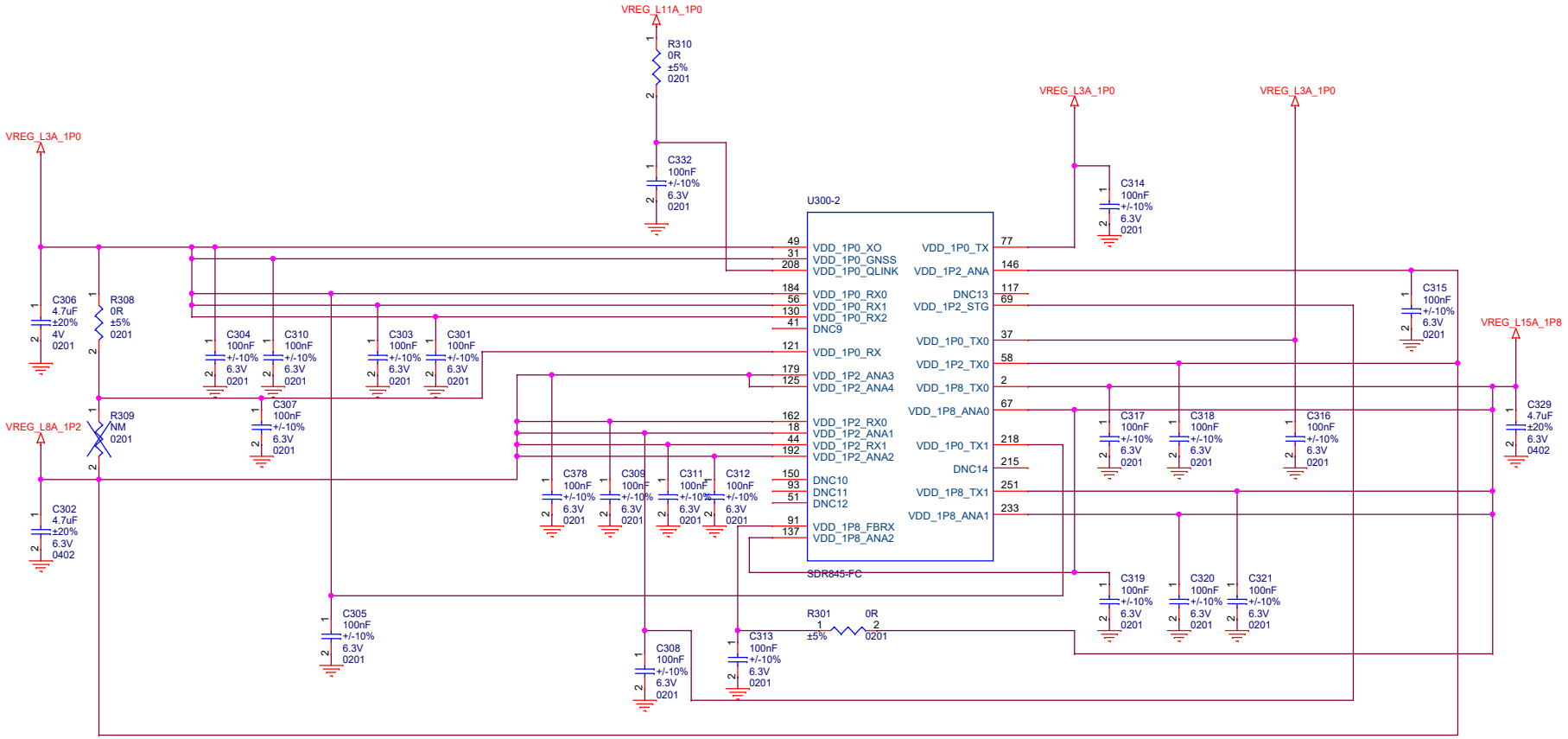

Title	E10	
Size A3	Document Number WTR5975 POWER	Rev P0
Date: Friday, May 11, 2018	Sheet 7 of 41	

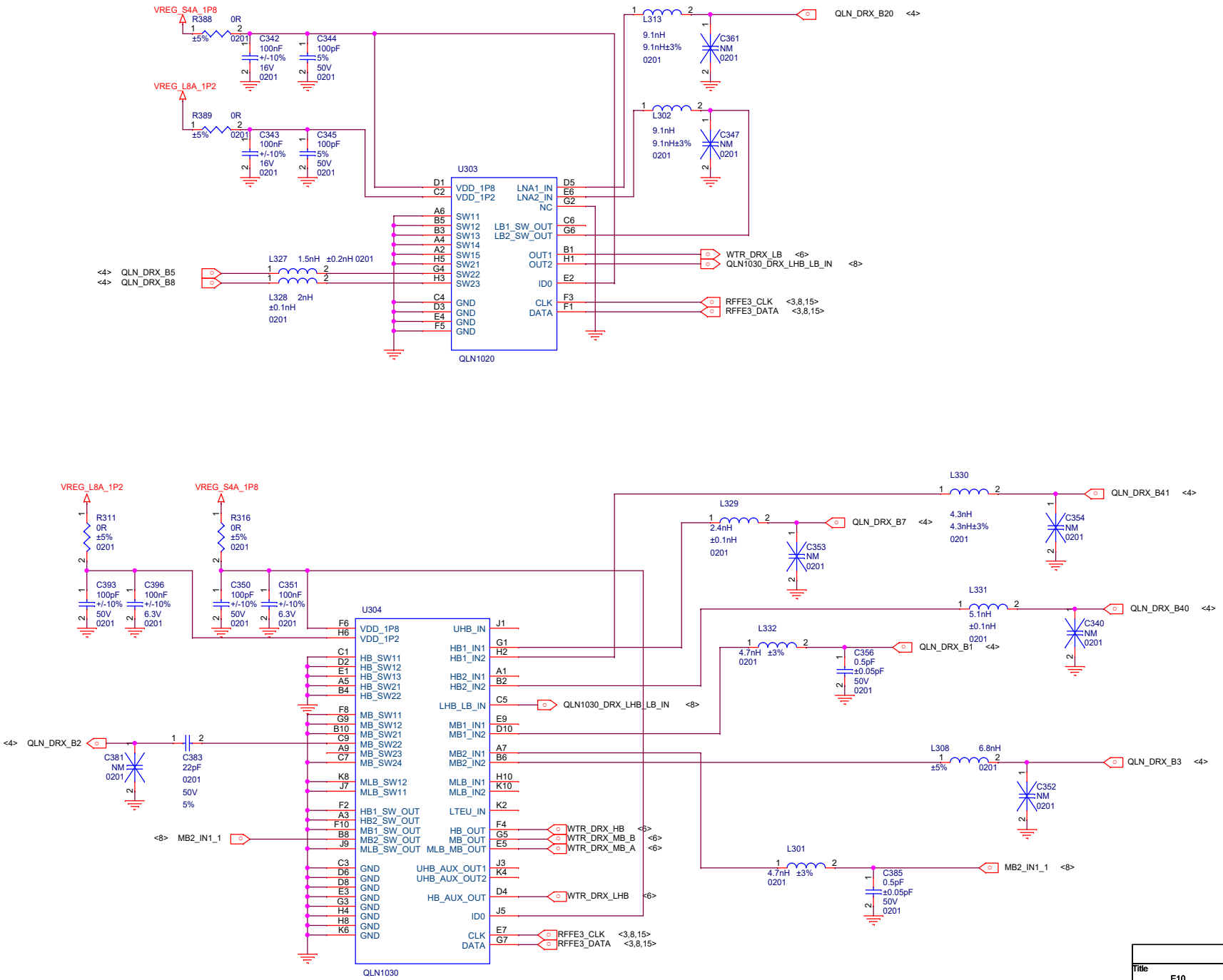

Title	E10	
Size A3	Document Number QLN DRX	Rev P0
Date: Friday, May 11, 2018	Sheet 8 of 41	

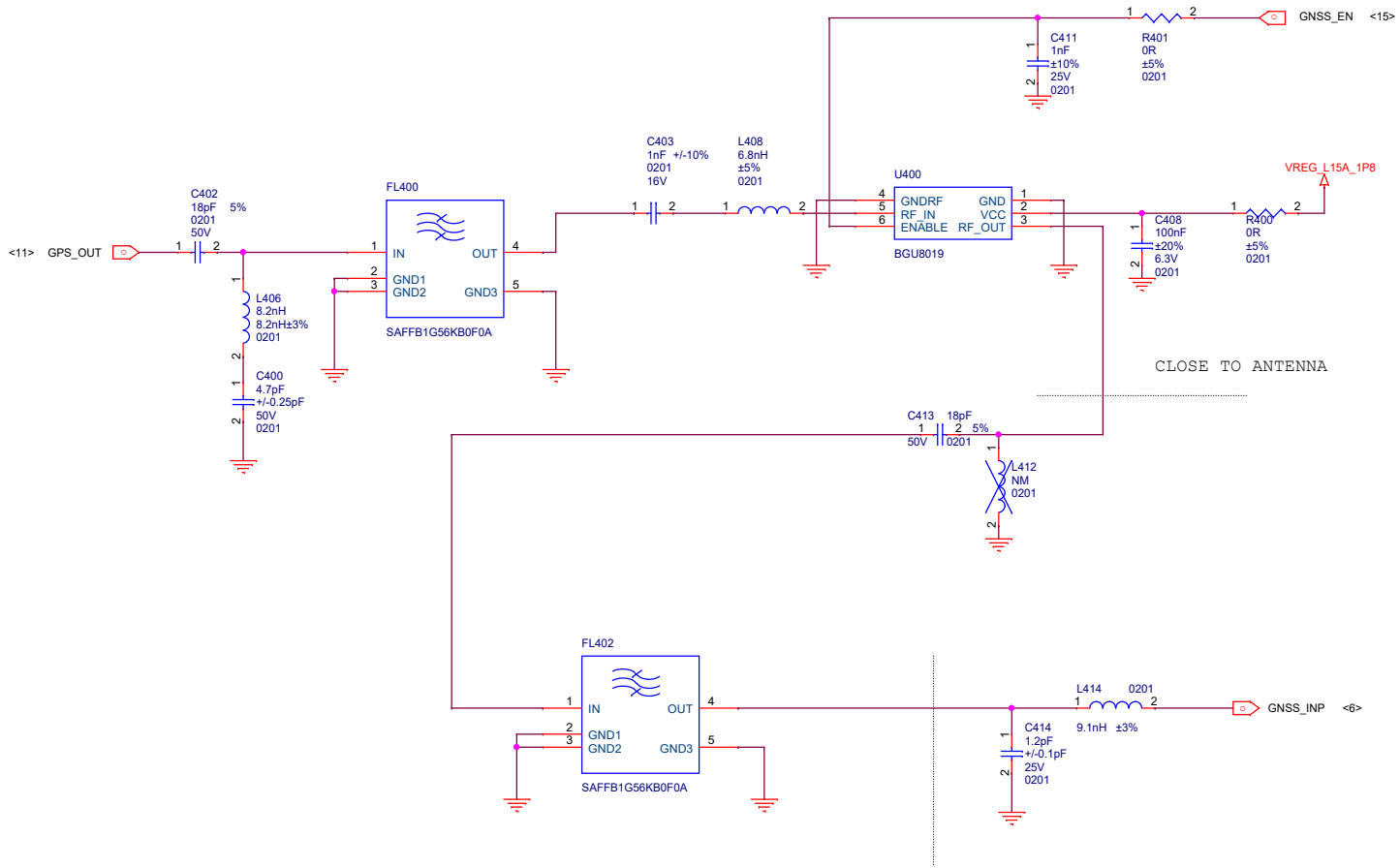

Title	E10	
Size A3	Document Number GPS	Rev P0
Date: Friday, May 11, 2018	Sheet 9 of 40	

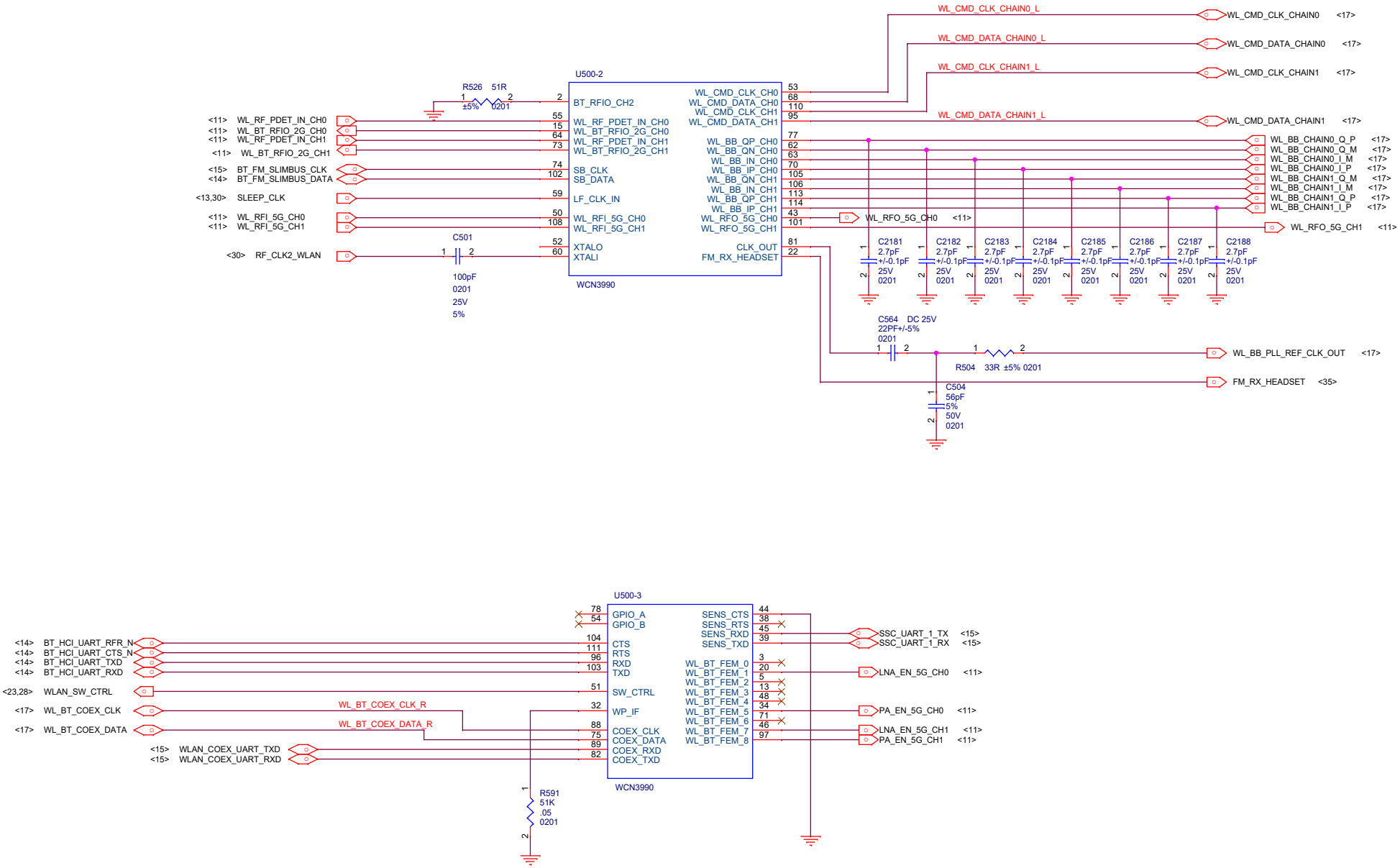

Title	E10	
Size A3	Document Number WIFI INTERFACE	Rev P0
Date: Friday, May 11, 2018	Sheet 10 of 40	

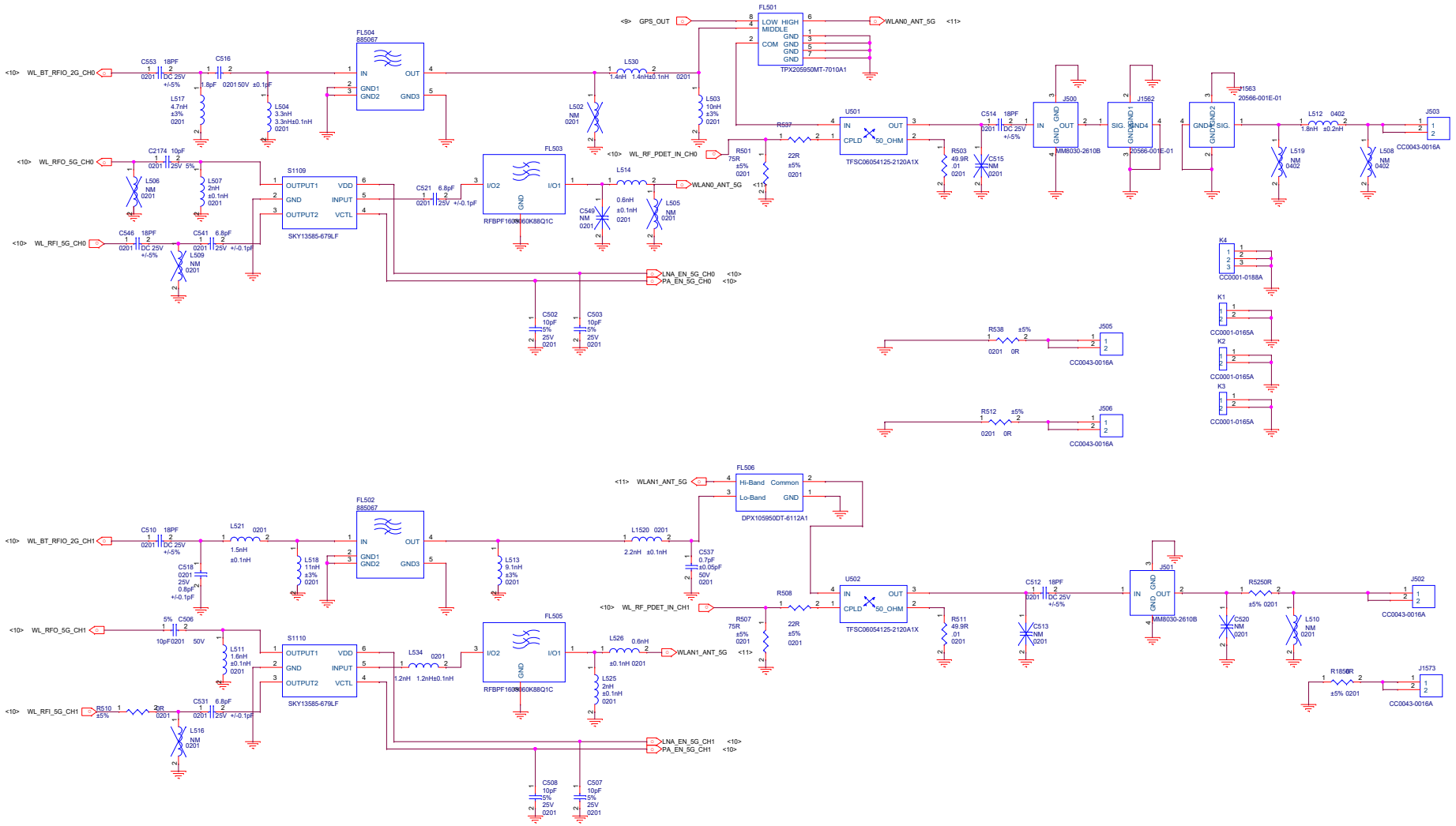

BT/WIFI FEM

Title	E10		
Size A2	Document Number BT/WIFI FEM		Rev P0
Date: Friday, May 11, 2018	Sheet 11 of 40		

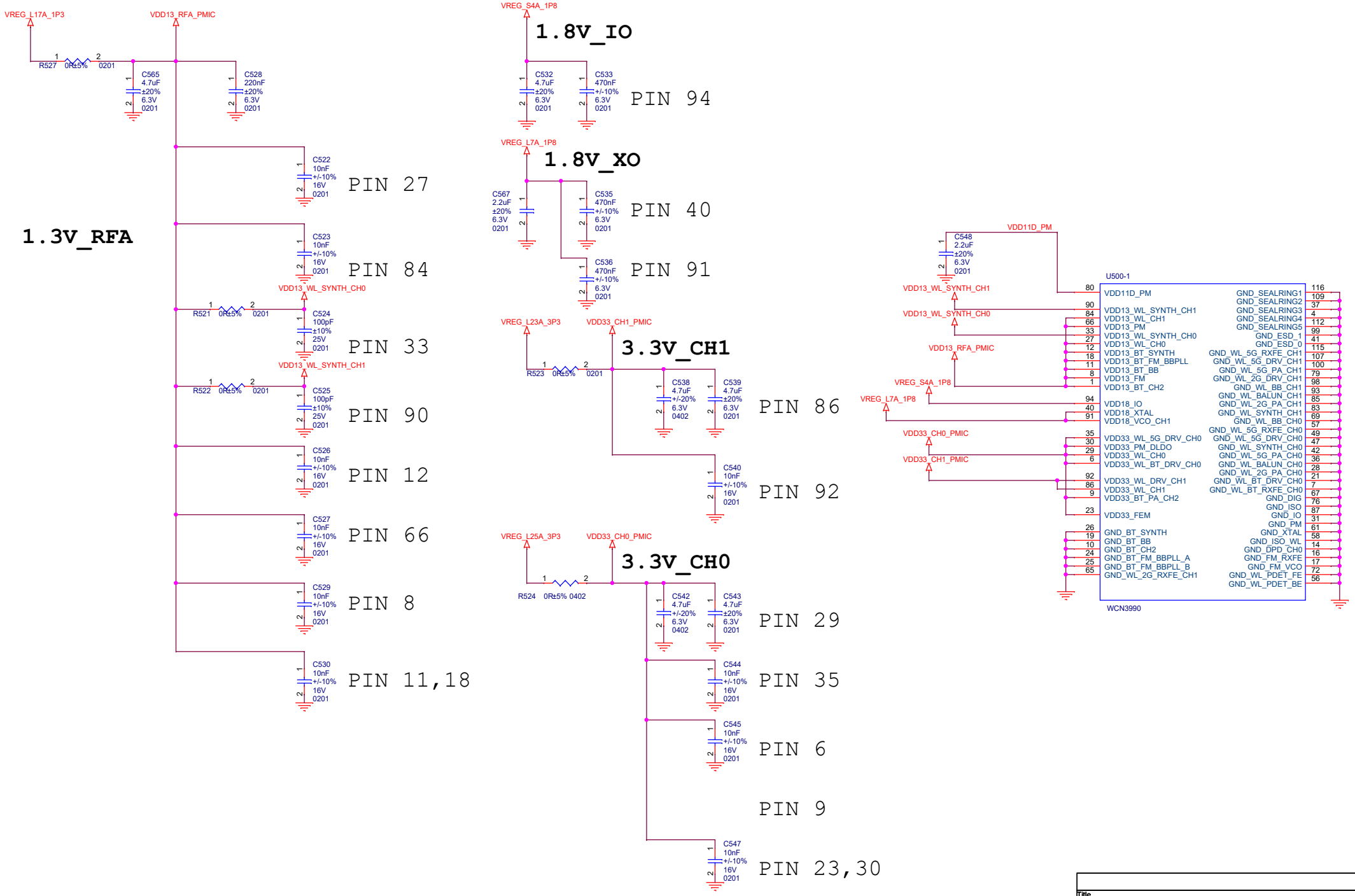

Title	E10	
Size A3	Document Number BT/WLAN DECOUP	Rev P0
Date: Friday, May 11, 2018	Sheet 12 of 40	

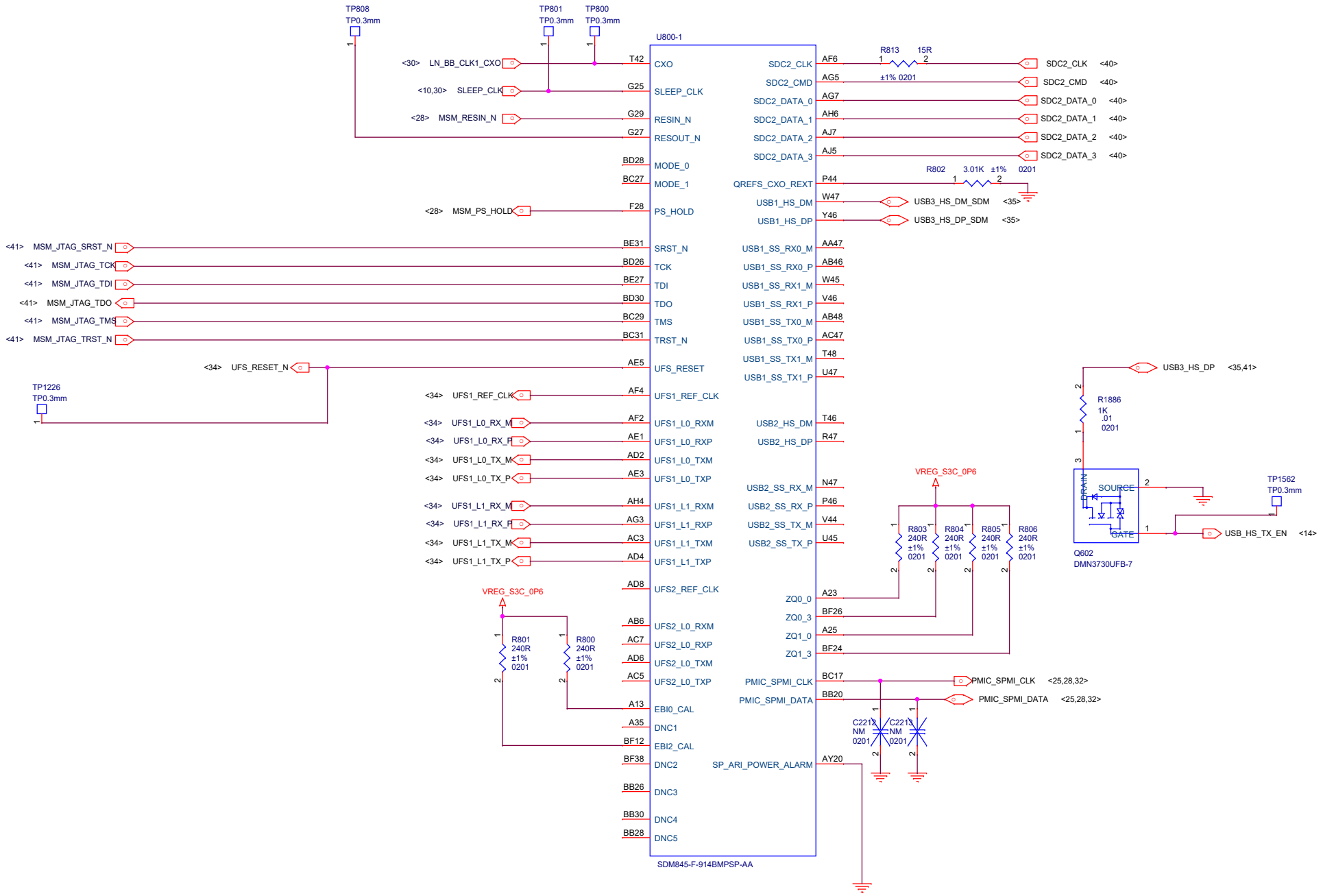

Title	E10		
Size A3	Document Number MSM8998 CONTROL		Rev P0
Date: Friday, May 11, 2018	Sheet 13 of 40		

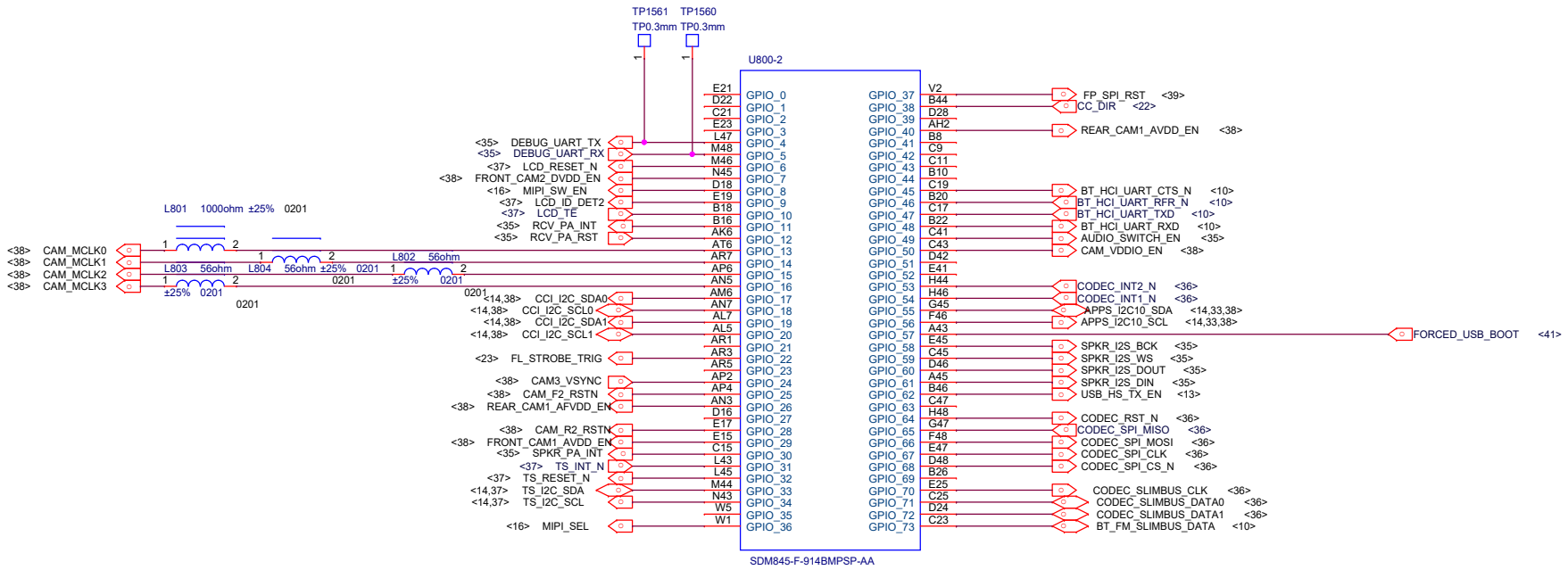

SENSOR

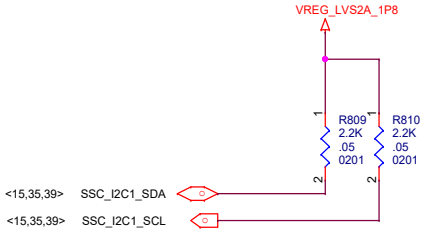

APPS

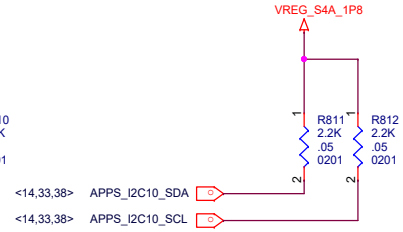

REAR CAMERA

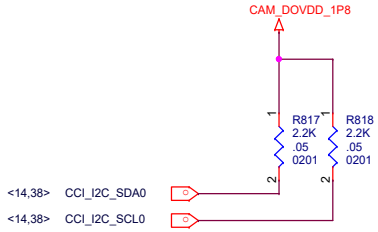

TP

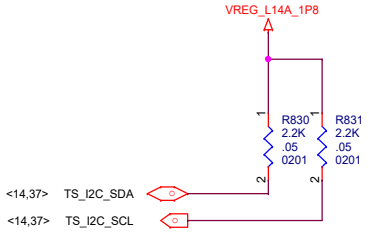

FRONT CAMERA

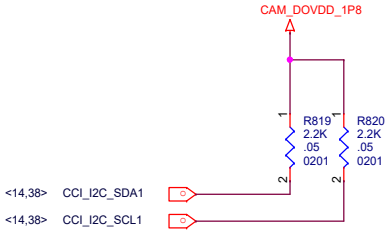

AUDIO&WPC

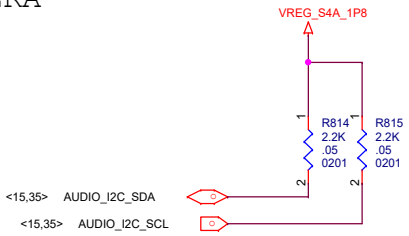

Title	E10		
Size A3	Document Number MSM8998 GPIO		Rev P0
Date: Friday, May 11, 2018	Sheet 14 of 40		

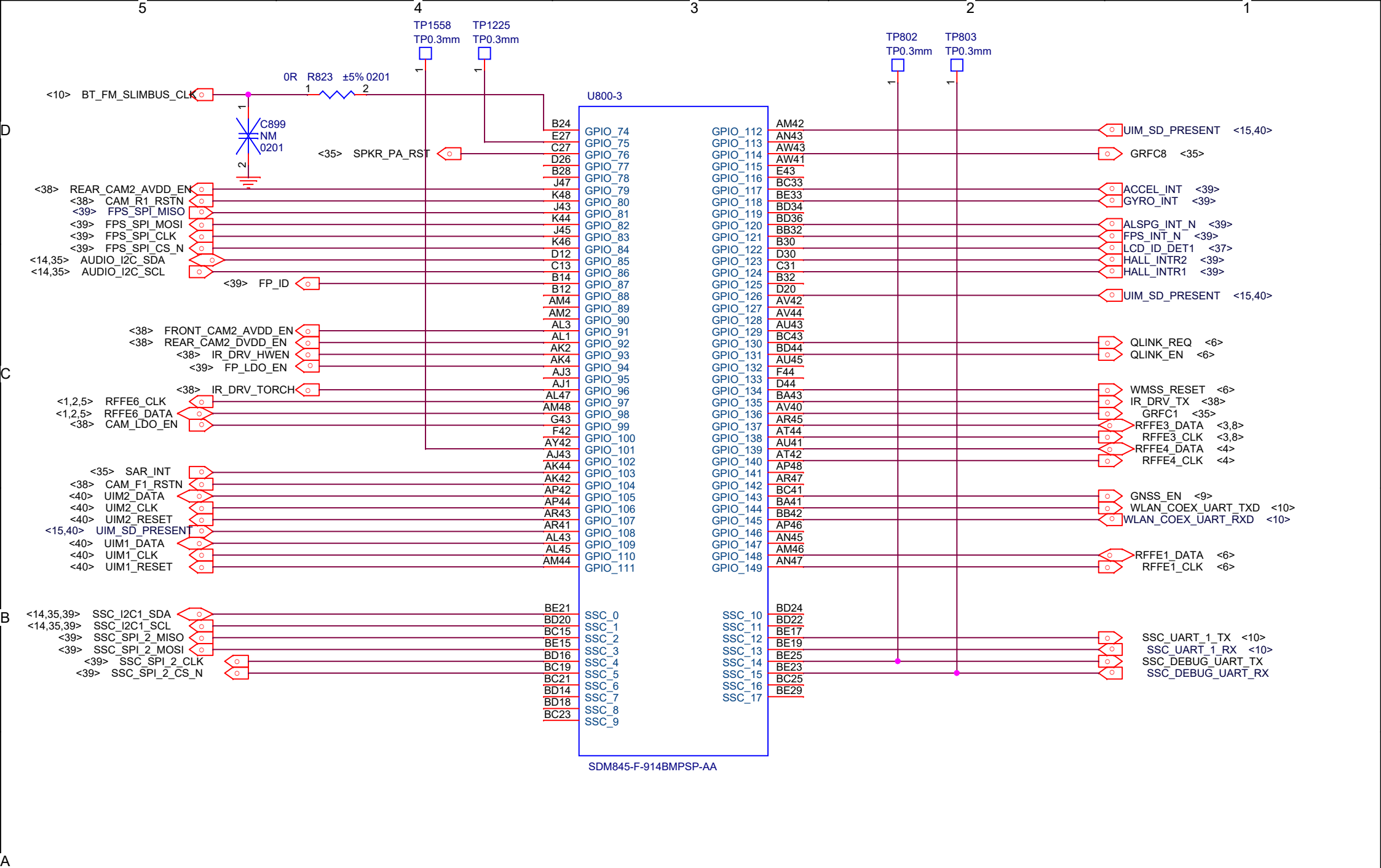

Title	E10	
Size	Document Number	Rev
Custom	<Doc>	<Rev
Date:	Friday, May 11, 2018	Sheet 15 of 40

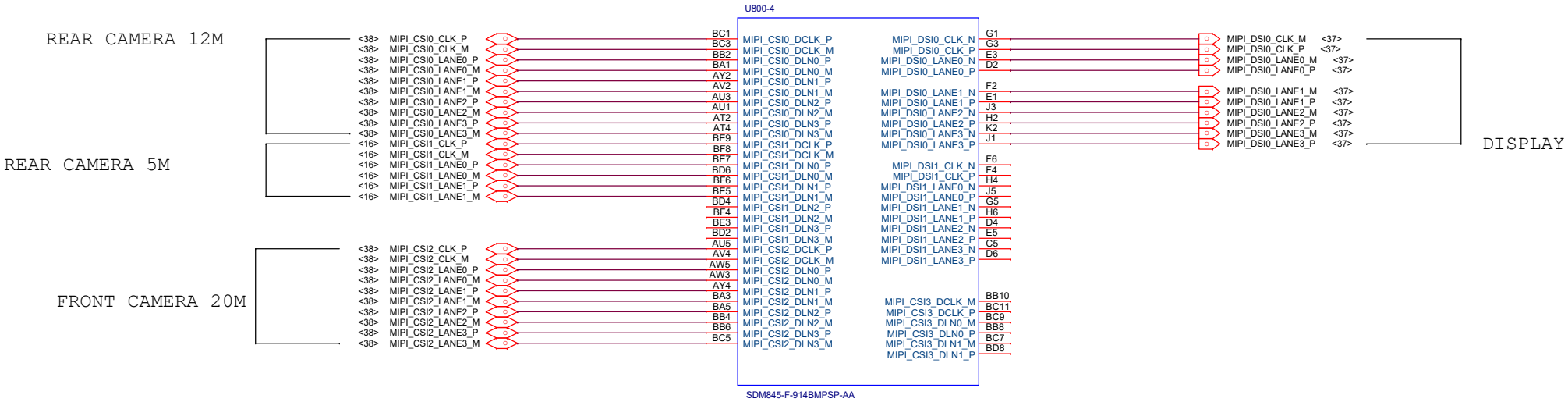

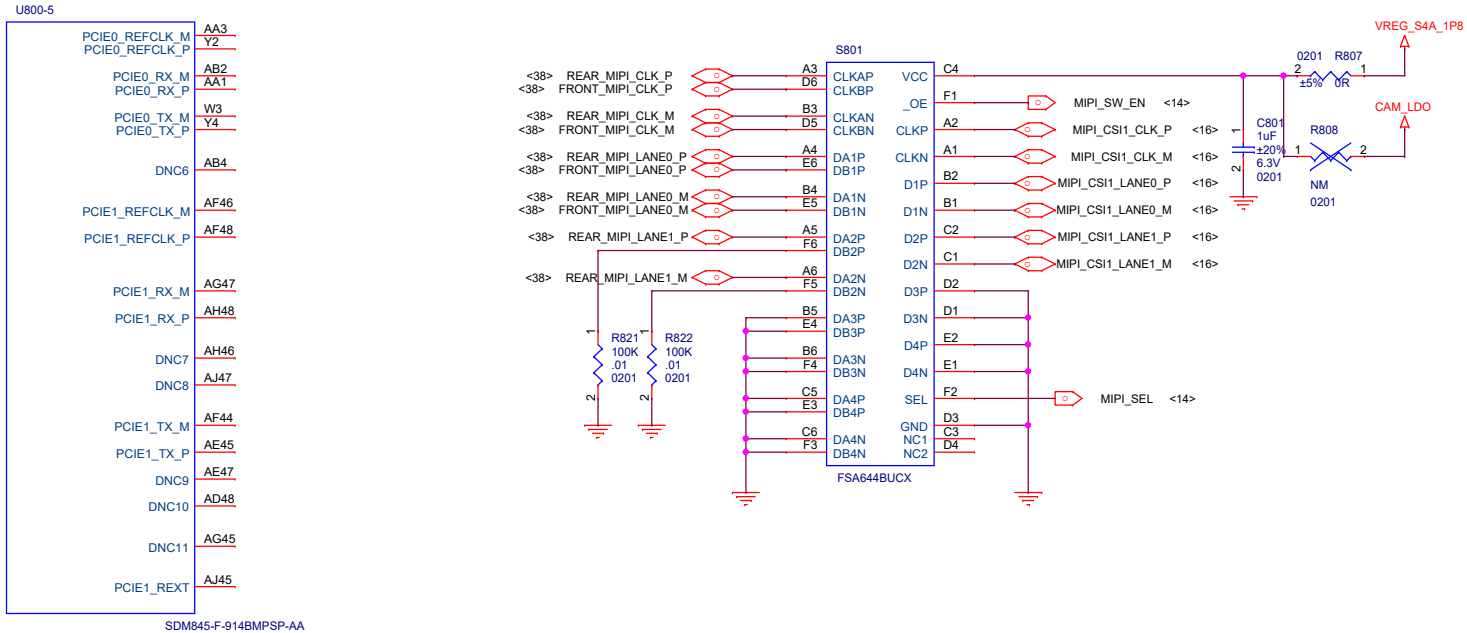

Title	E10		
Size A3	Document Number MSM8998 MIPI		Rev P0
Date: Friday, May 11, 2018	Sheet 16 of 40		

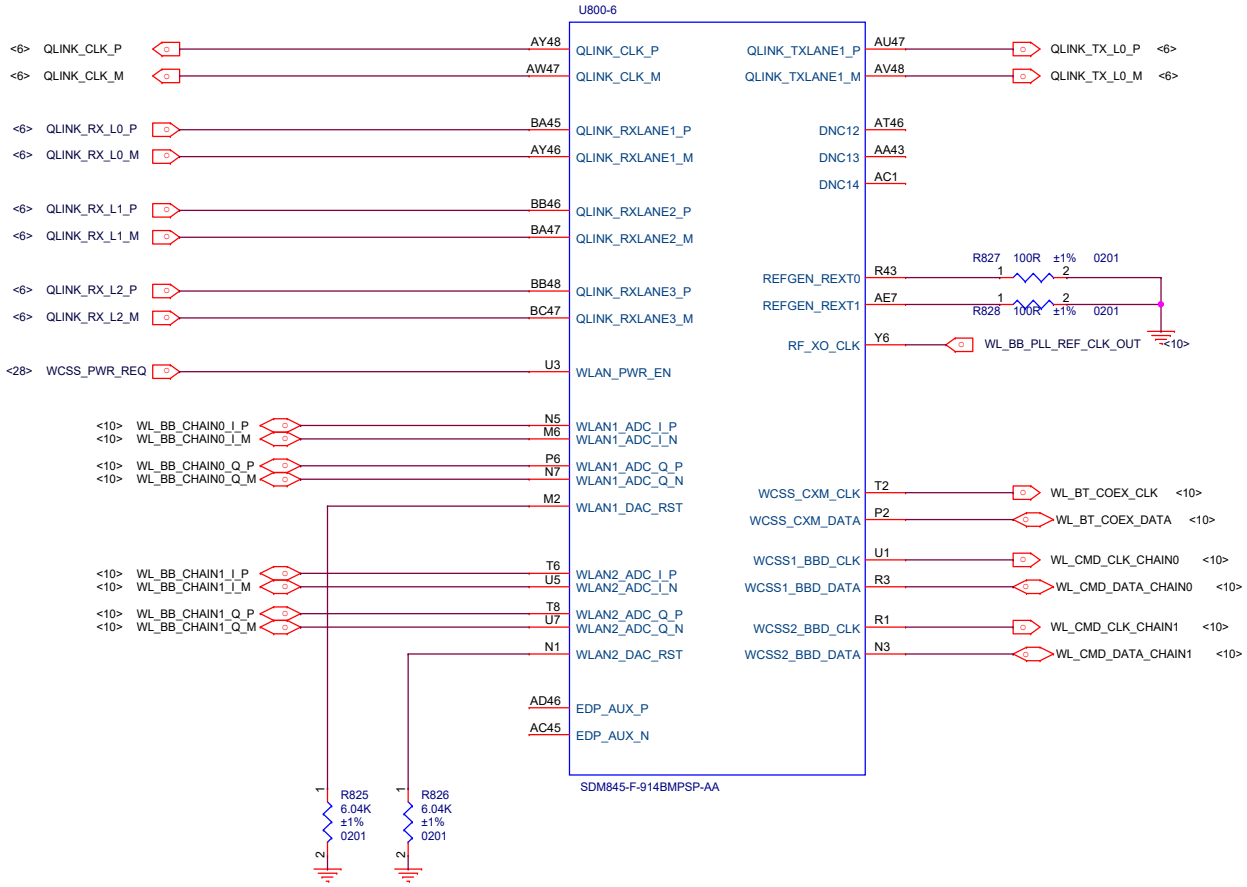

Title	E10	
Size A3	Document Number MSM8998 RF INTF	Rev P0
Date: Friday, May 11, 2018	Sheet 17 of 40	

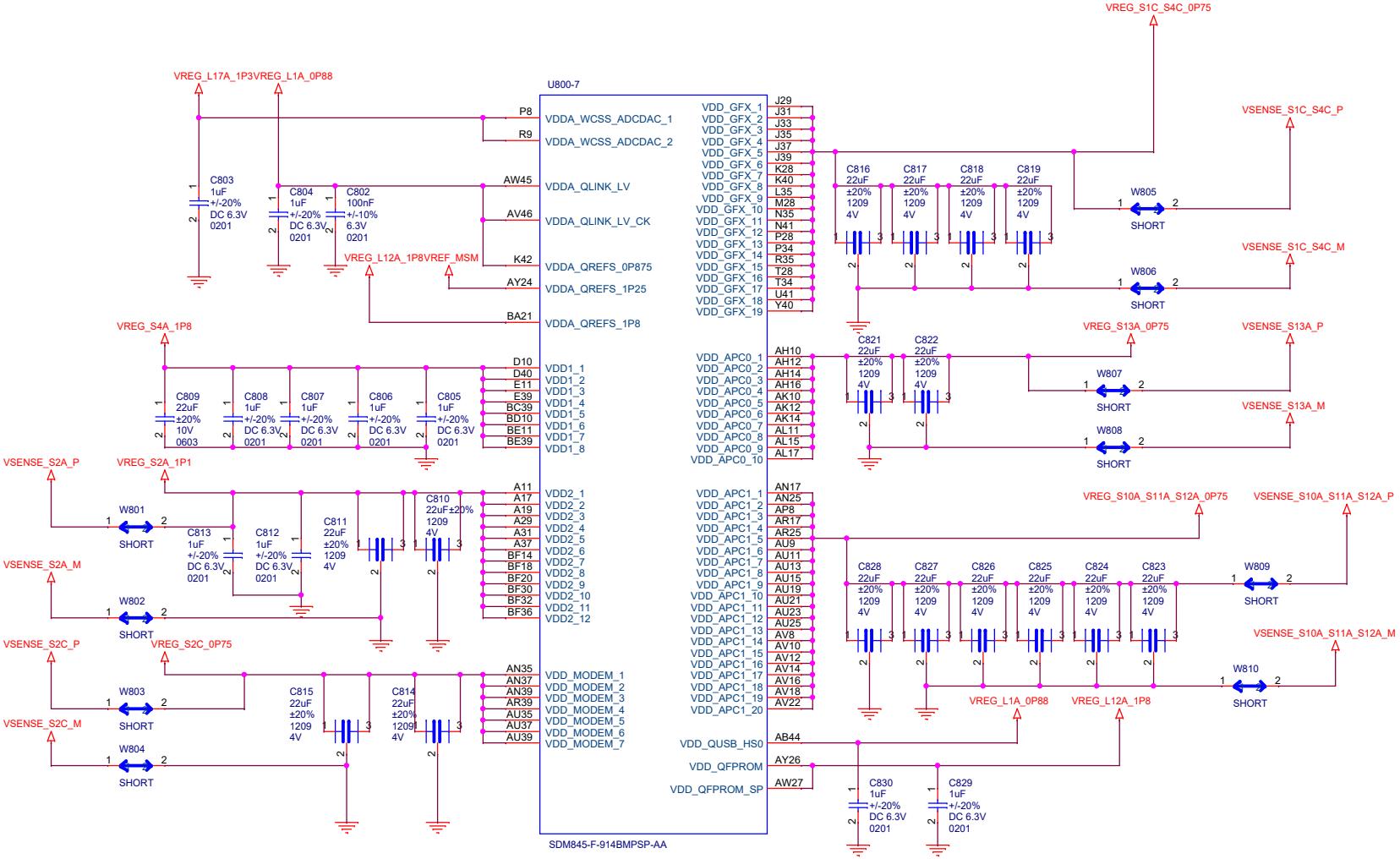

Title	E10	
Size A3	Document Number MSM8998 PWR1	Rev P0
Date: Friday, May 11, 2018	Sheet 18 of 40	

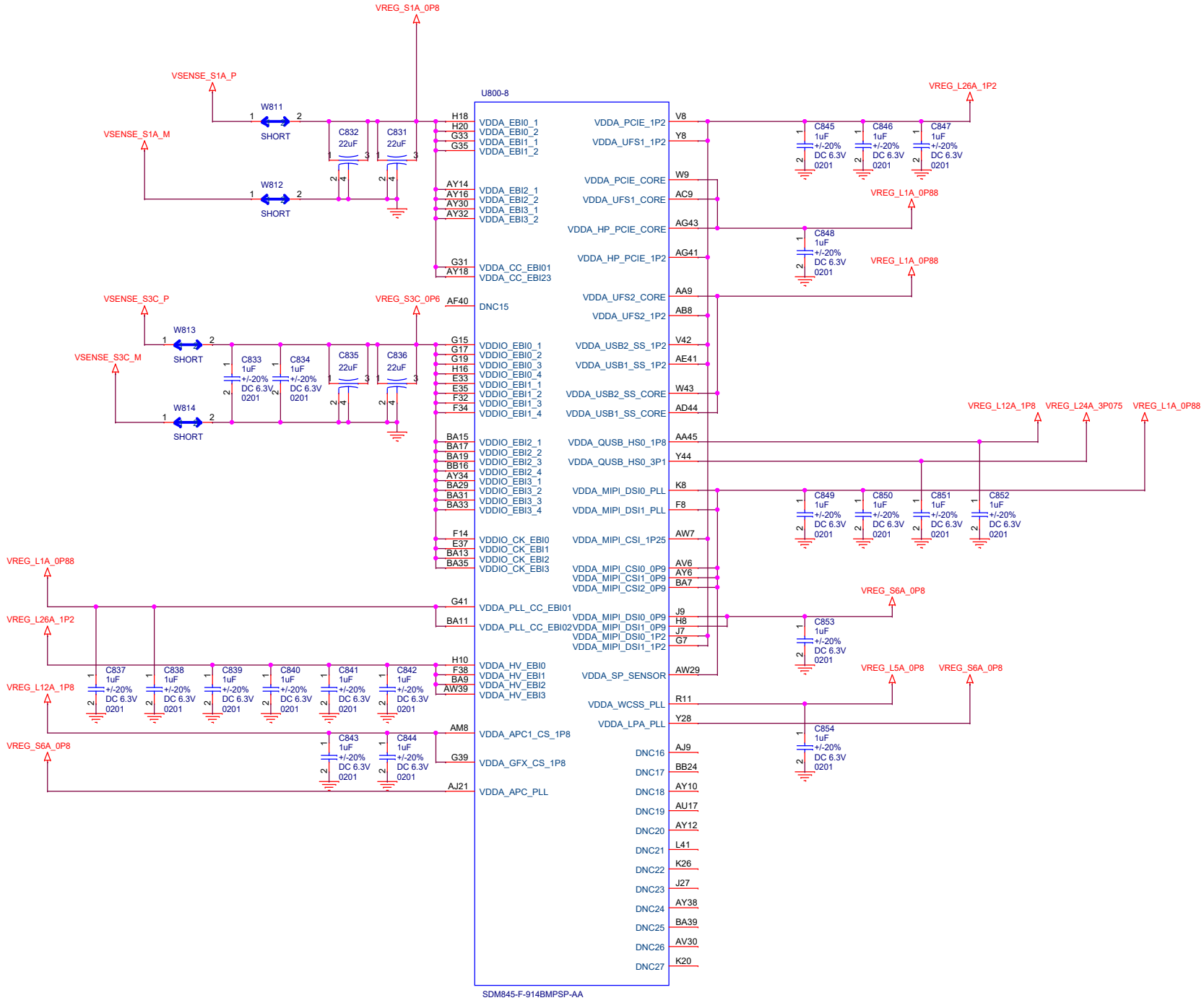

Title	E10		
Size A3	Document Number MSM8998 PWR2		Rev P0
Date: Friday, May 11, 2018	Sheet 19 of 40		

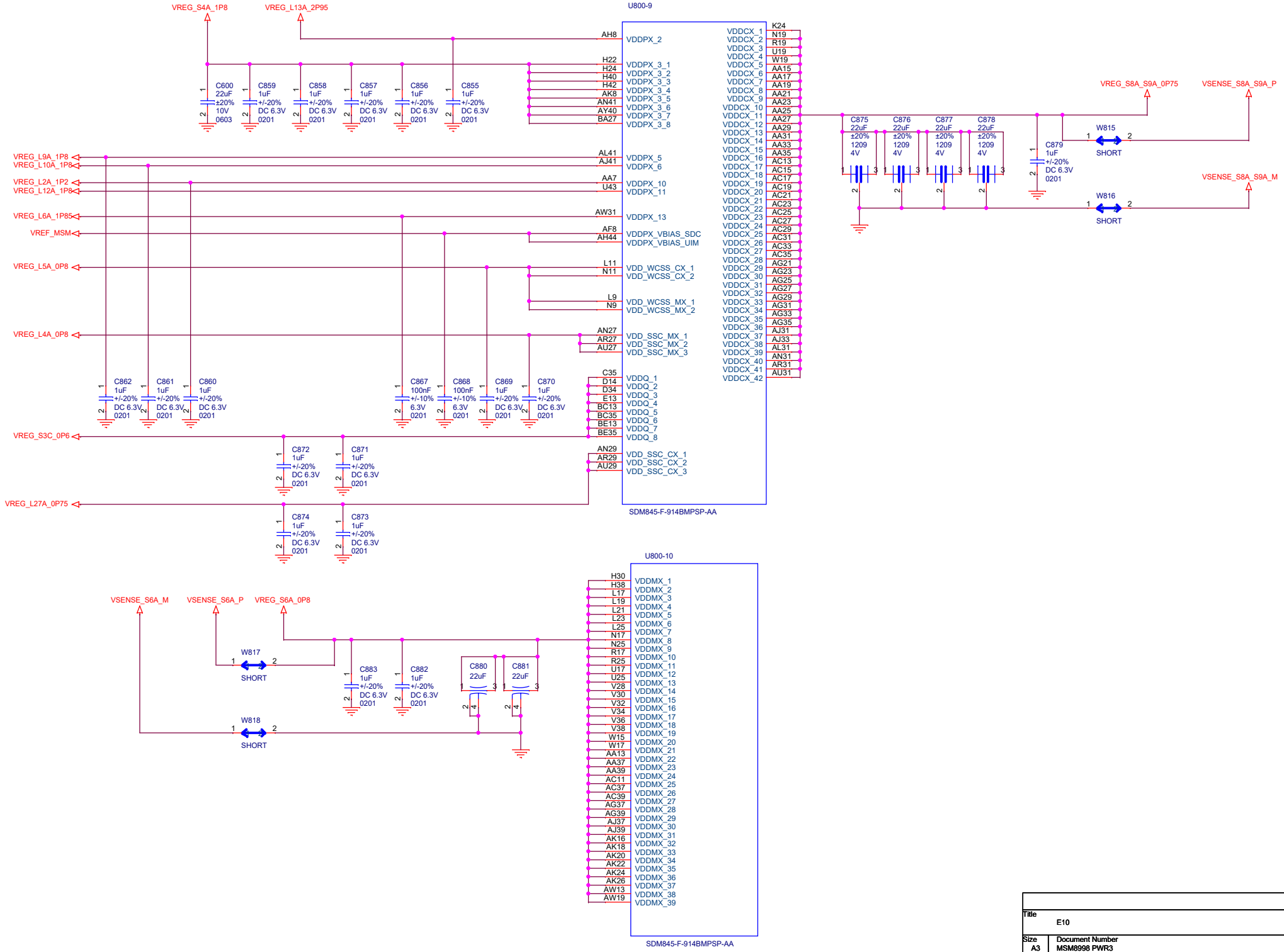

Title	E10	
Size A3	Document Number MSM8998 PWR3	Rev P0
Date: Friday, May 11, 2018	Sheet 20 of 40	

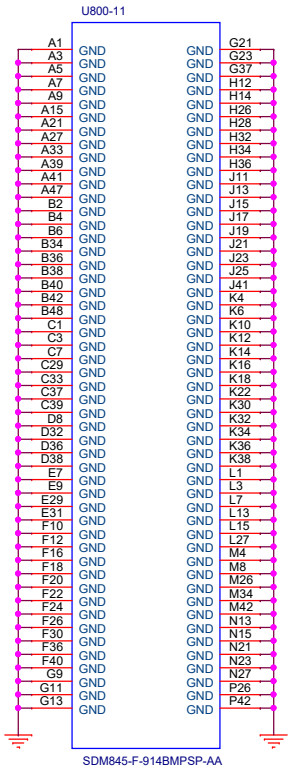

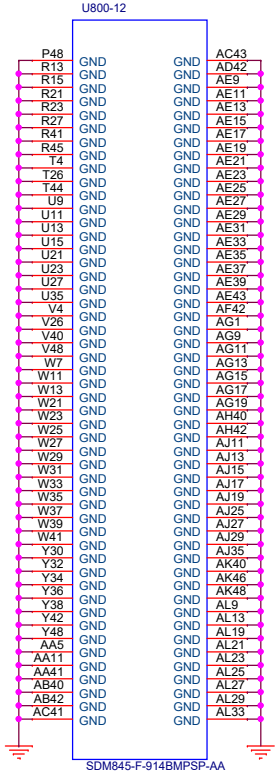

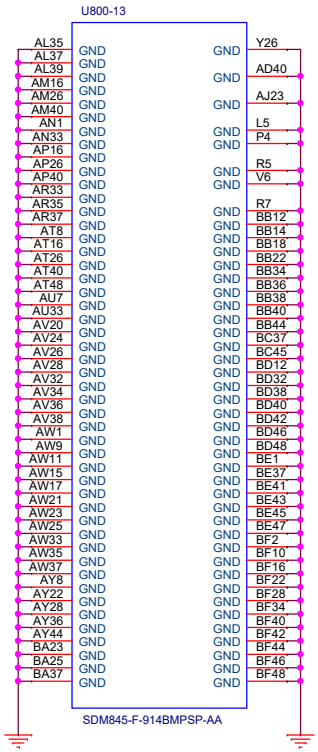

Title	E10	
Size A3	Document Number MSM8998 GND	Rev P0
Date: Friday, May 11, 2018	Sheet 21 of 40	

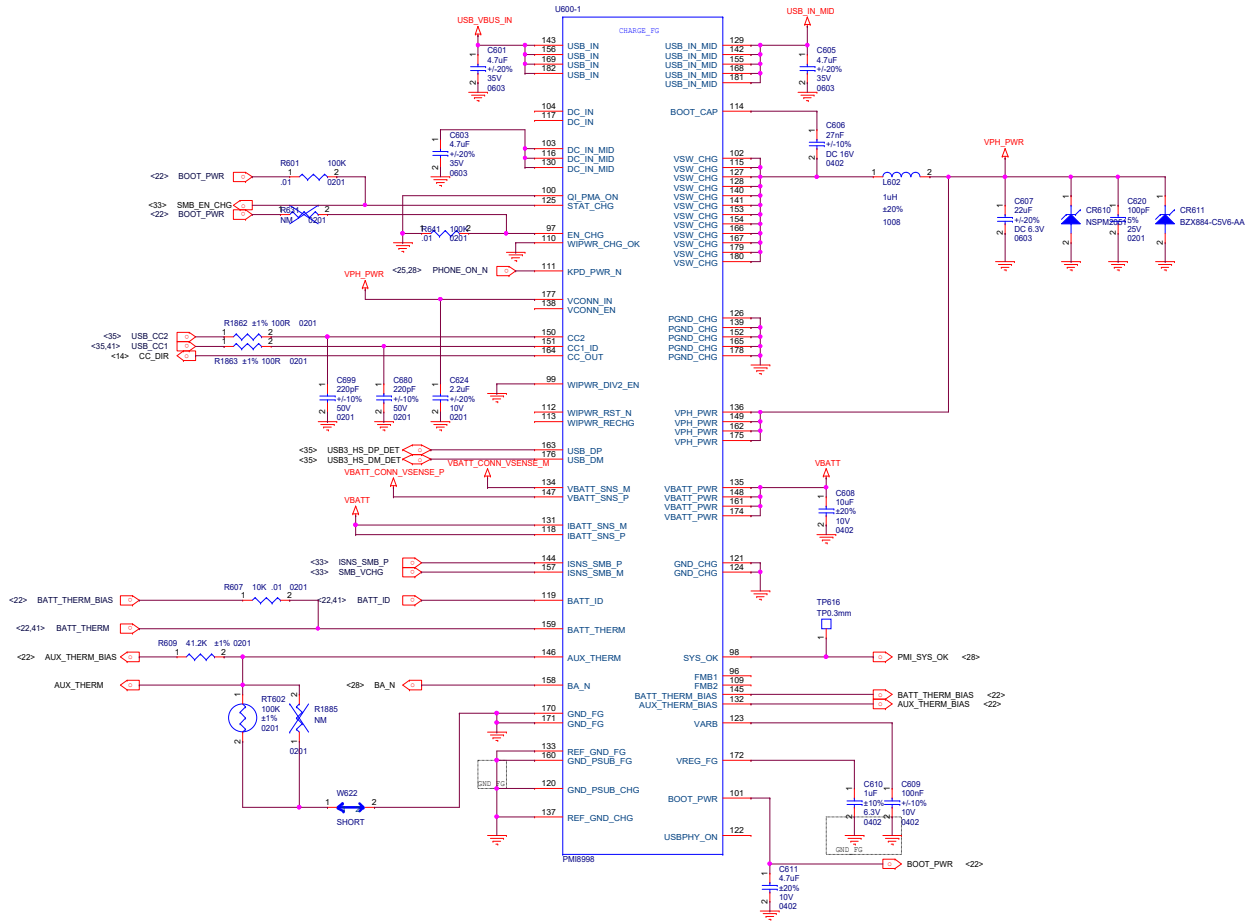

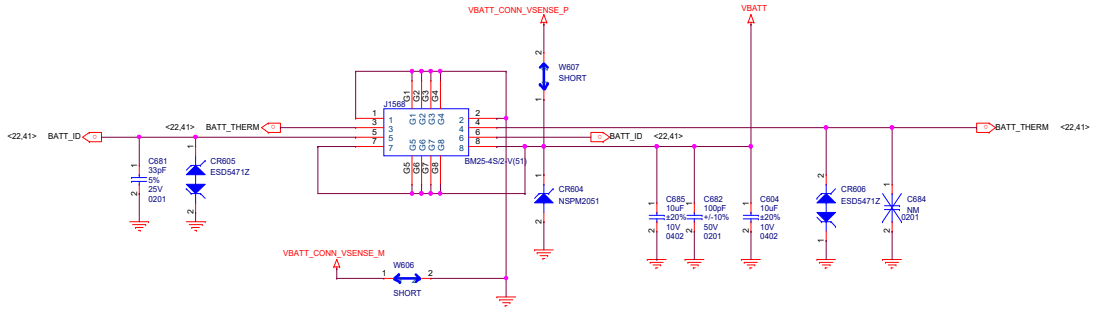

Title	E10		
Size A2	Document Number PMI8998 CHARGE		Rev P0
Date: Friday, May 11, 2018	Sheet 22 of 40		

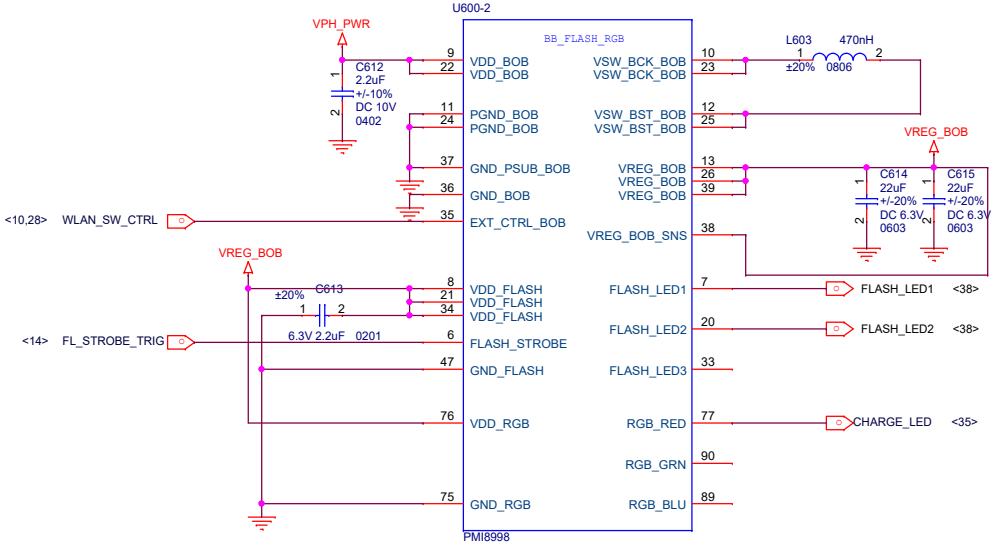

Title	E10	
Size A3	Document Number PMI8998 BB FLASH RGB	Rev P0
Date: Friday, May 11, 2018	Sheet 23 of 40	

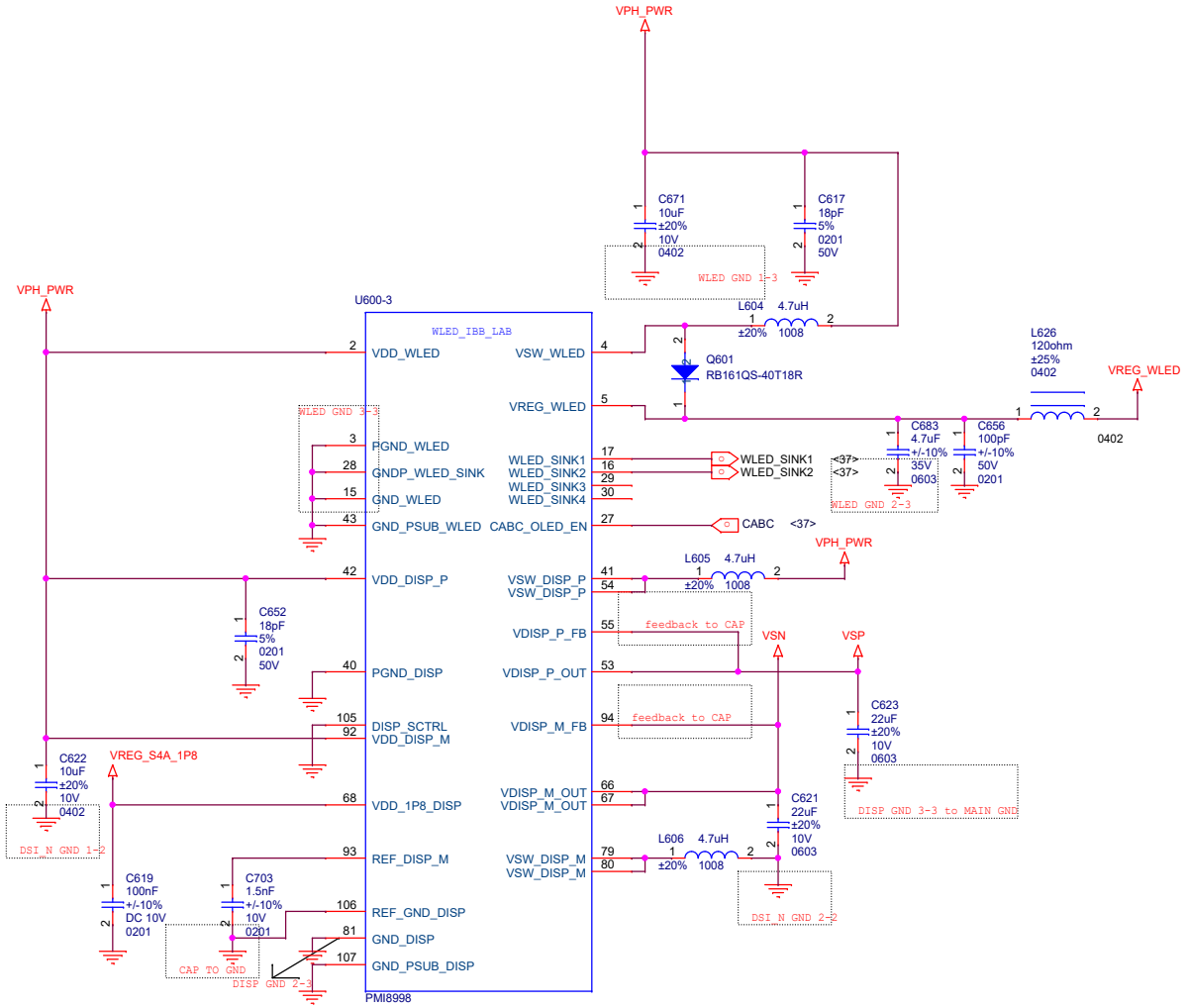

Title	E10		
Size A3	Document Number PMI8998 WLED IBB LAD		Rev P0
Date: Friday, May 11, 2018	Sheet 24 of 40		

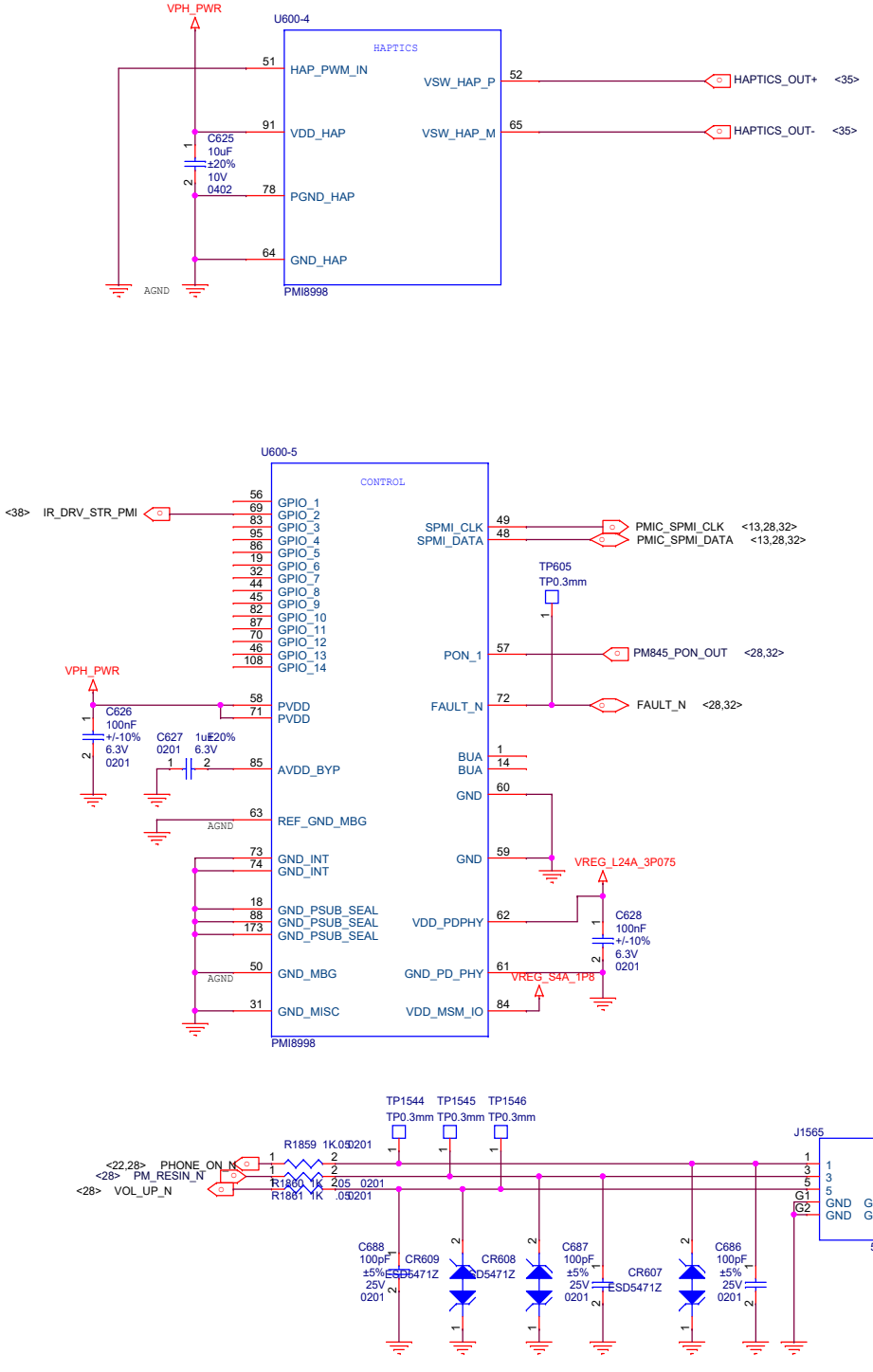

Title	E10		
Size A3	Document Number PMI8998 HAPTICS&CONTROL		Rev P0
Date: Friday, May 11, 2018	Sheet 25 of 40		

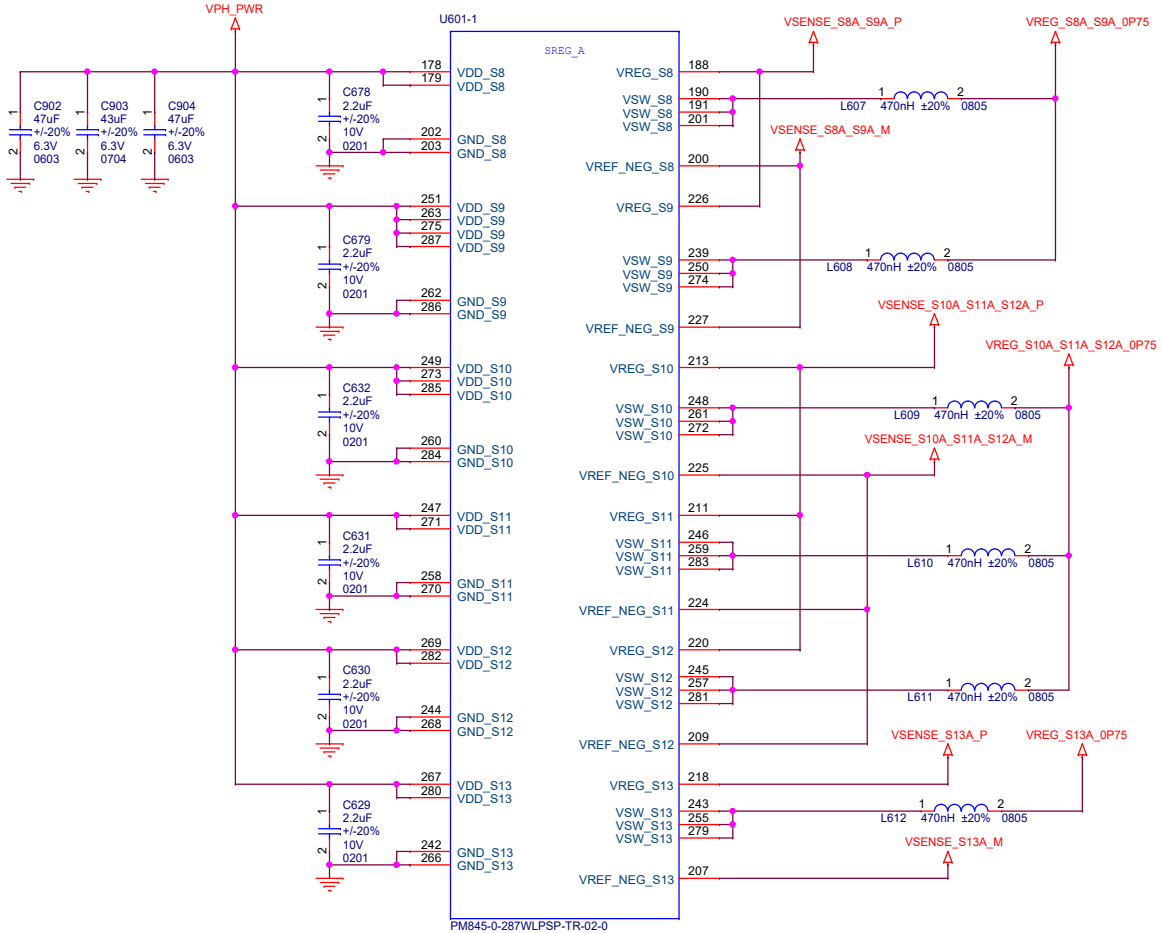

Title	E10	
Size A3	Document Number PM8998 SREG A	Rev P0
Date: Friday, May 11, 2018	Sheet 26 of 40	

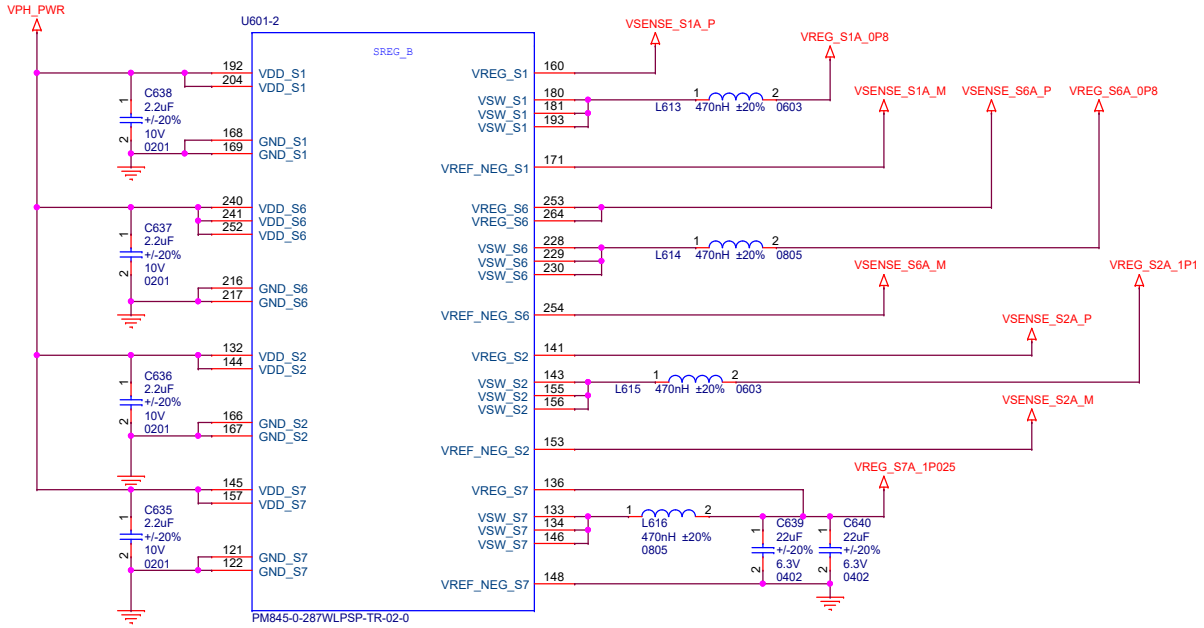

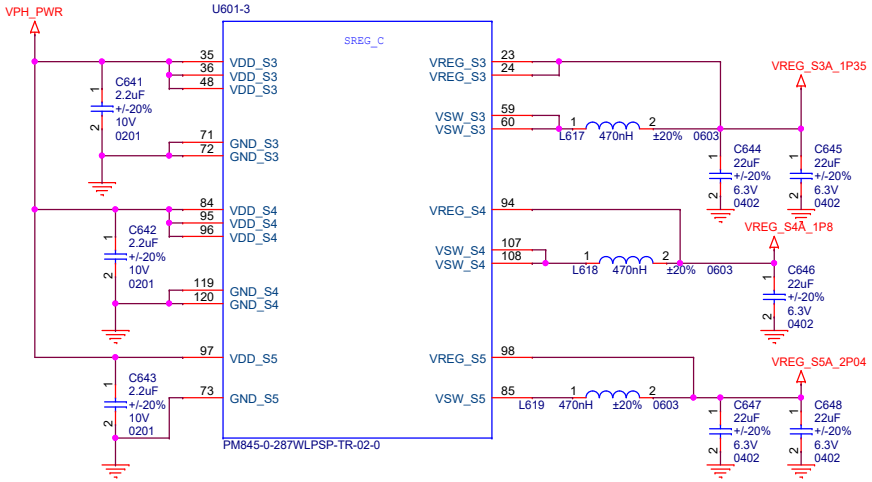

Title	E10	
Size A3	Document Number PM8998 SREG B&C	Rev P0
Date: Friday, May 11, 2018	Sheet 27 of 40	

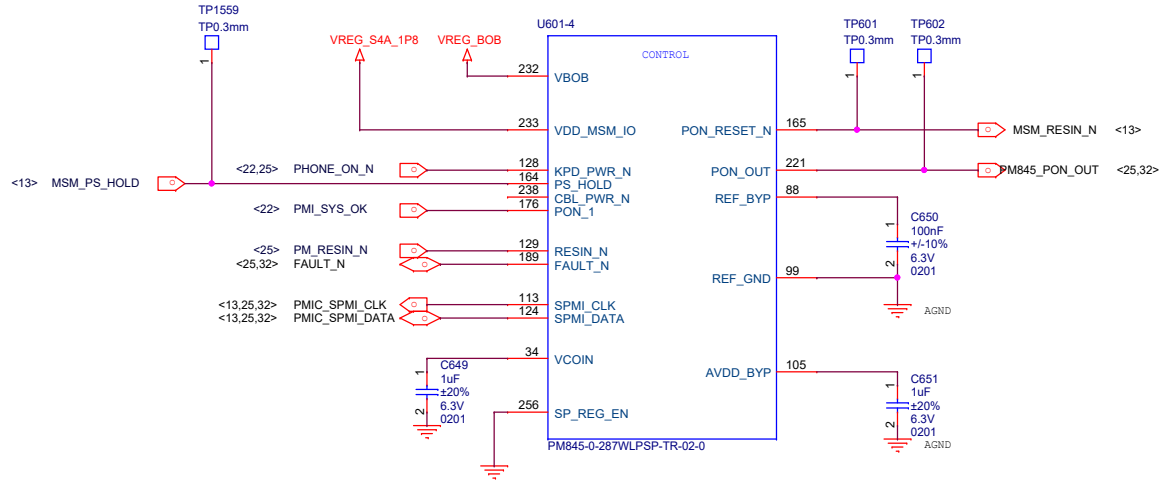

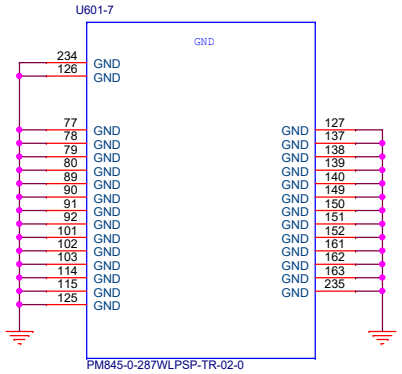

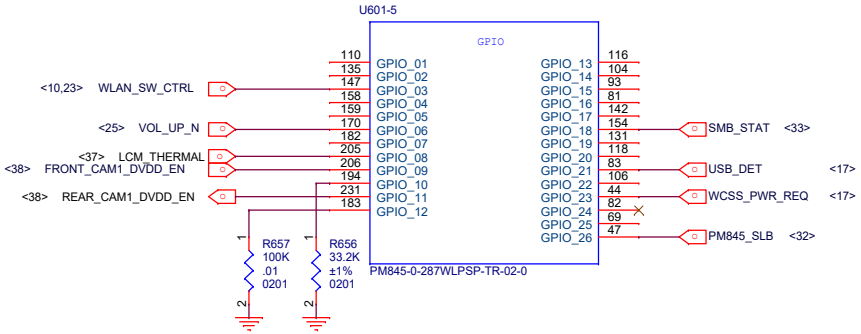

HW Version	HW_ID R656_AMUX3(PM845 GPIO_10)	Project Name	Project_ID R657_AMUX5_GPIO(PM845 GPIO_12)	Comments
P0	11kohms	E10	100kohms	
P0.5	17.8kohms	E10	100kohms	
P1	24.9kohms	E10	100kohms	

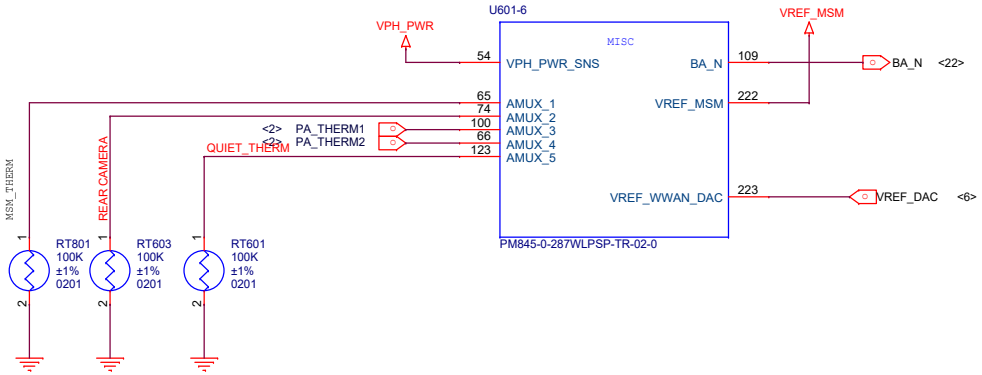

Title	E10		
Size A3	Document Number PM8998 CONTROL&GPIO&MICS		Rev P0
Date: Friday, May 11, 2018	Sheet 28 of 40		

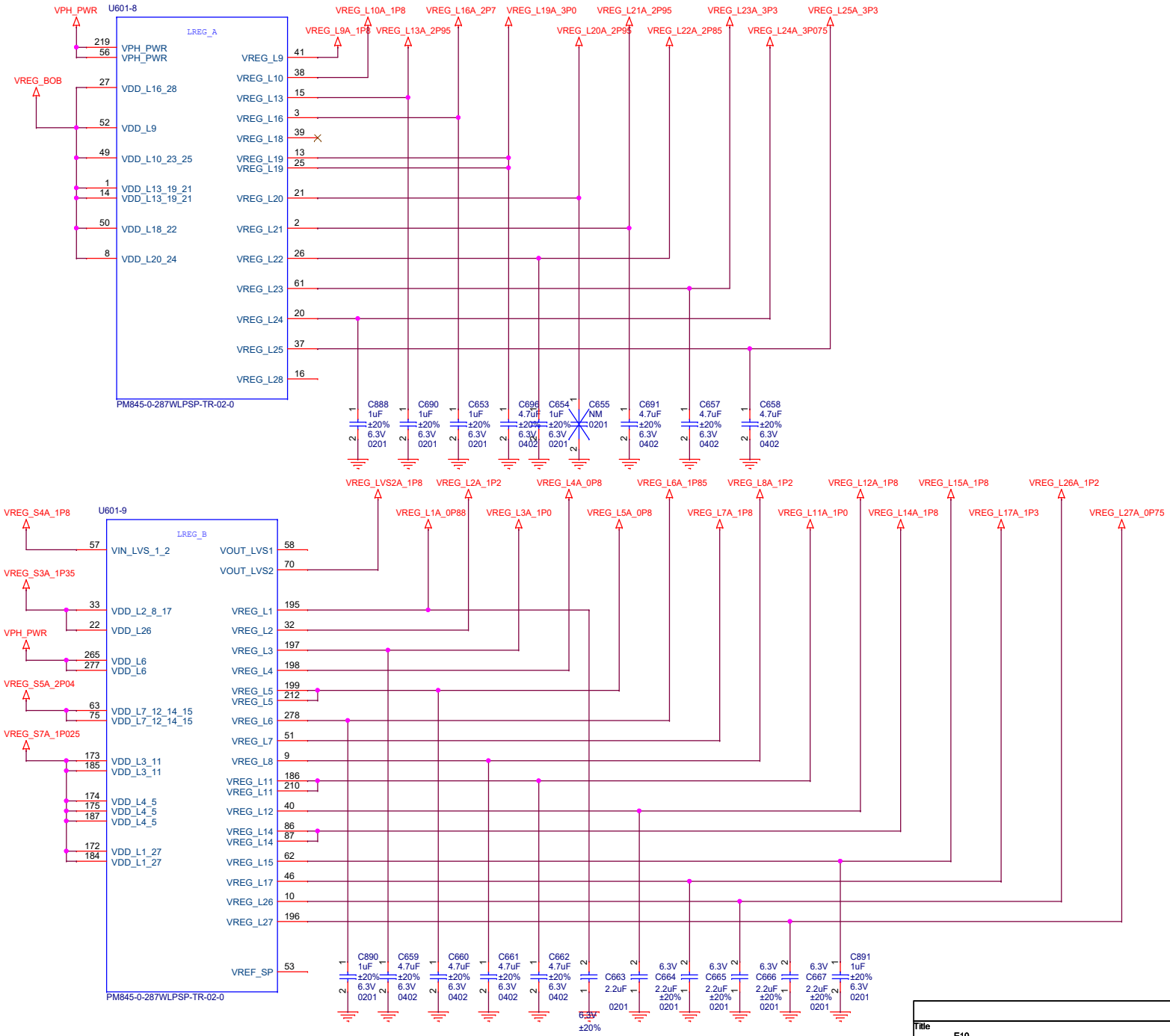

Title	E10	
Size A3	Document Number PM8998 LREG A&B	Rev P0
Date: Friday, May 11, 2018	Sheet 29 of 40	

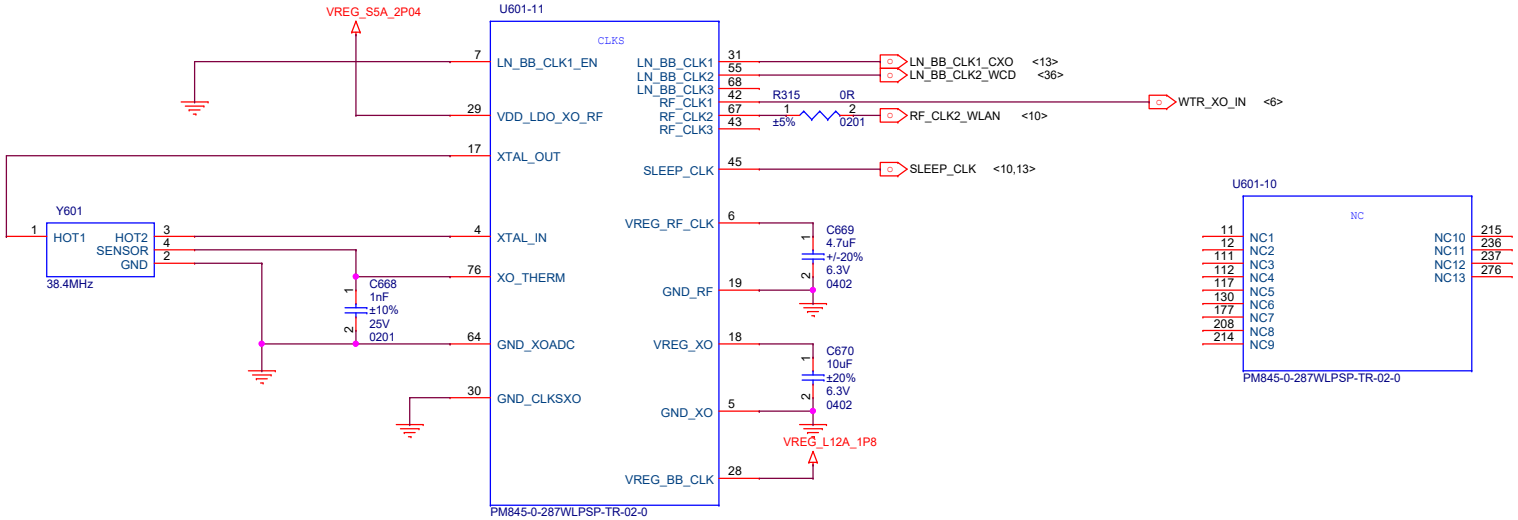

Title	E10	
Size A3	Document Number PM8998 CLKS	Rev P0
Date: Friday, May 11, 2018	Sheet 30 of 40	

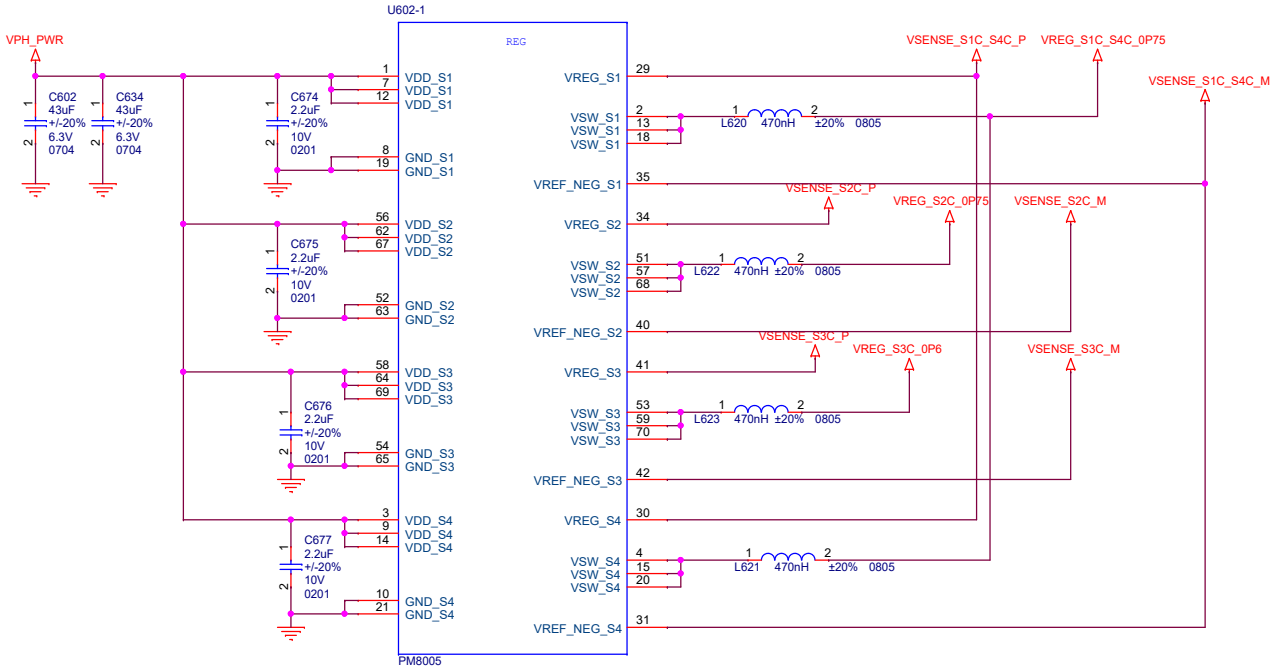

Title	E10	
Size A3	Document Number PM8005 REG	Rev P0
Date: Friday, May 11, 2018	Sheet 31 of 40	

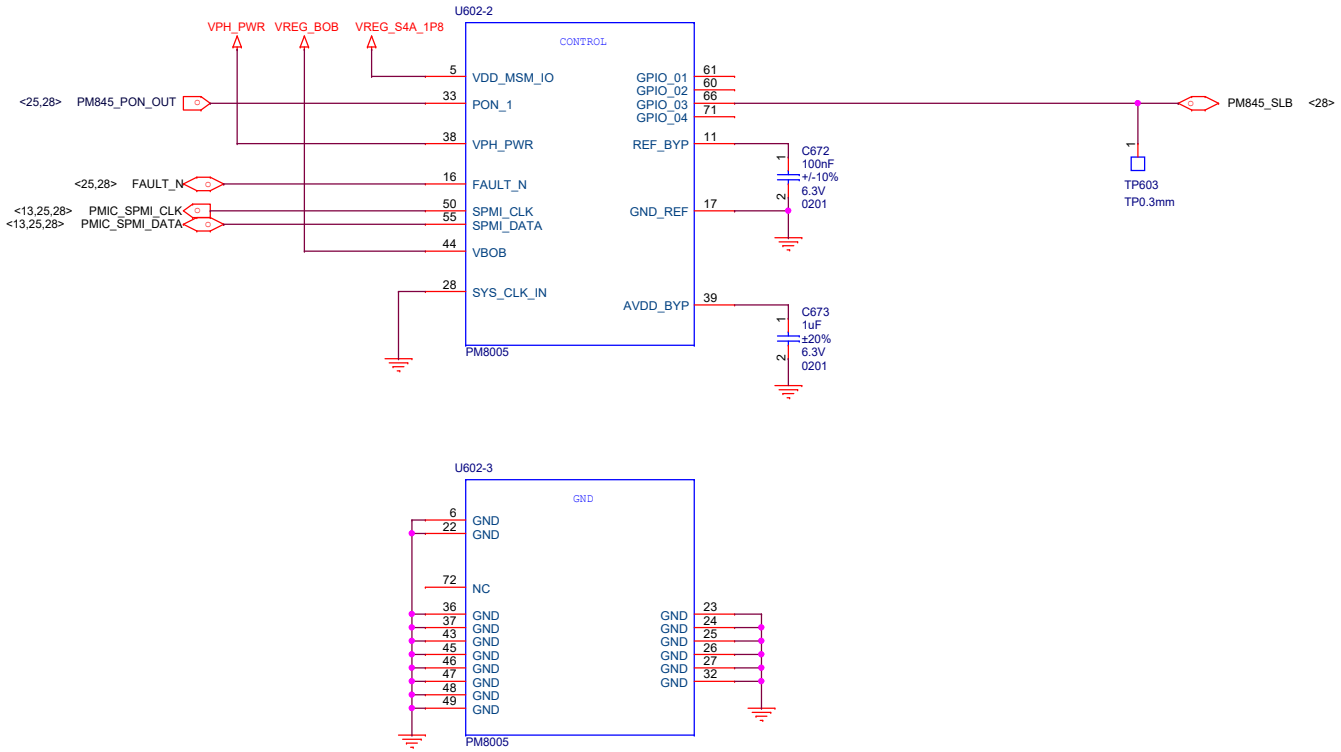

Title	E10	
Size A3	Document Number PM8005 CONTROL&GND	Rev P0
Date: Friday, May 11, 2018	Sheet 32 of 40	

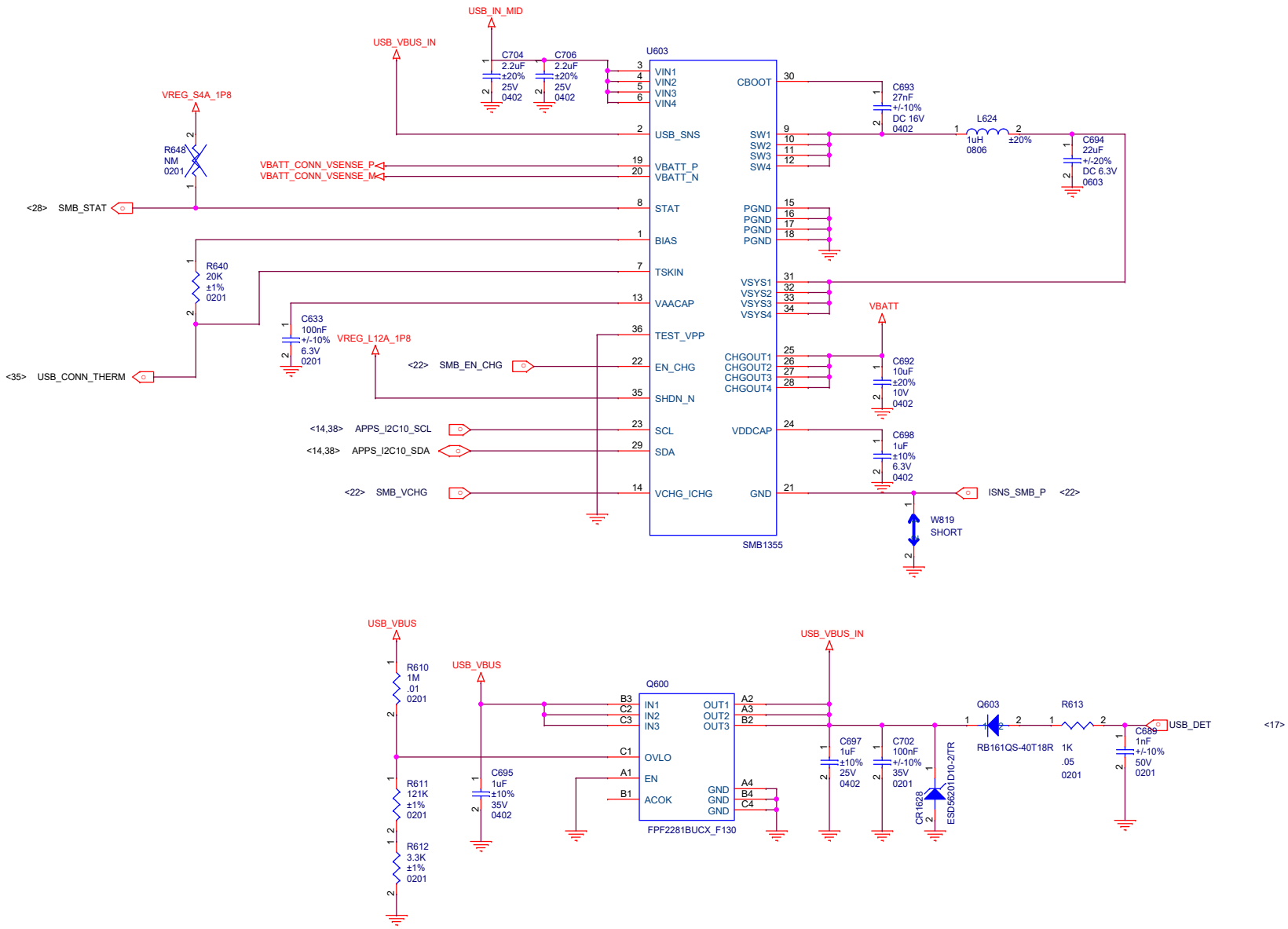

Title	E10	
Size A3	Document Number SMB1381	Rev P0
Date: Friday, May 11, 2018	Sheet 33 of 40	

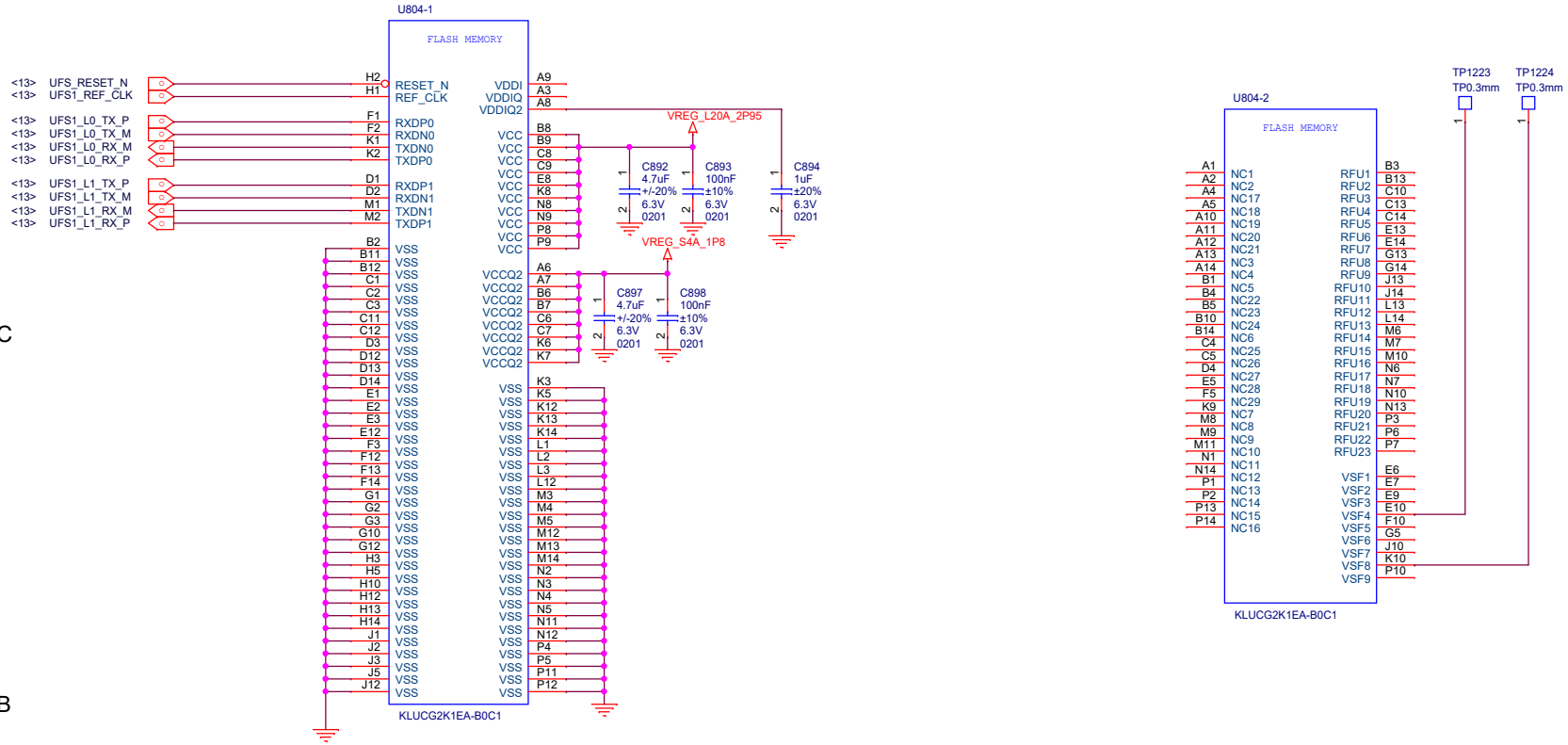

Title	E10
Size A3	Document Number MEMORY UFS
Rev	P0
Date:	Friday, May 11, 2018
Sheet	34 of 40

HEADSET

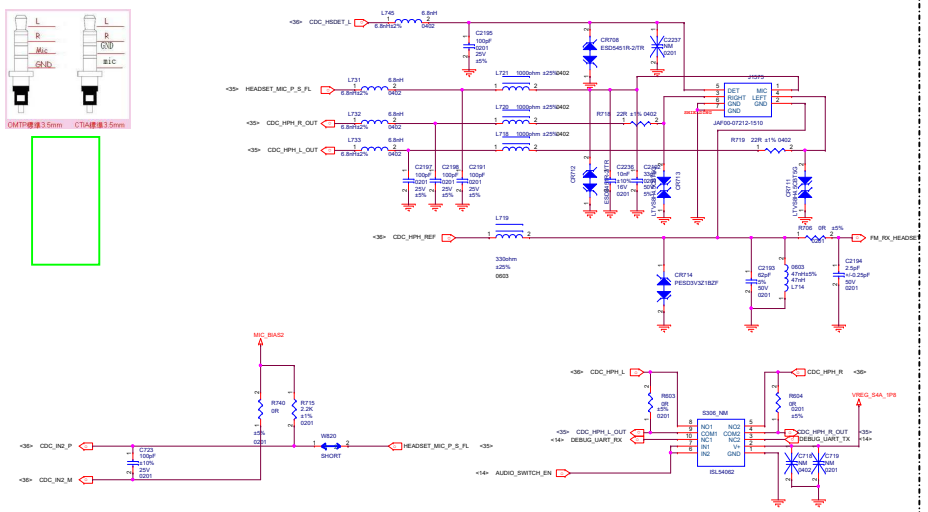

Receiver PA

R: 0x99 W:0x98

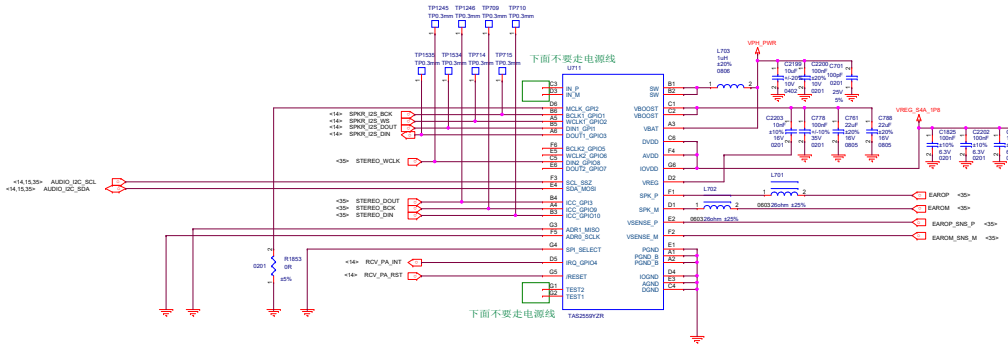

Speaker PA

R:0x9B W:0x9A

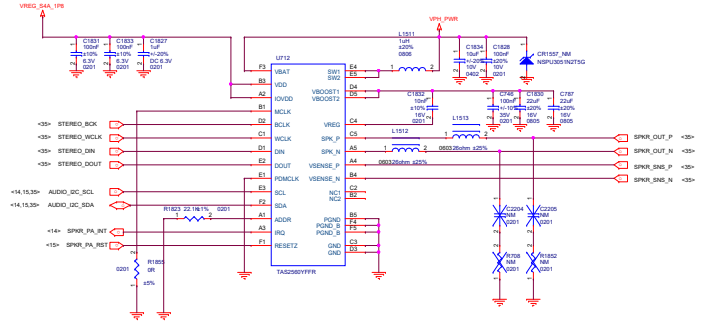

AUX Mic

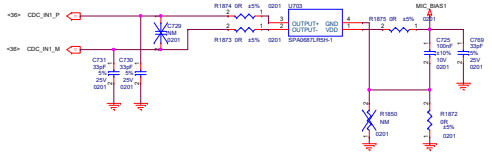

Receiver

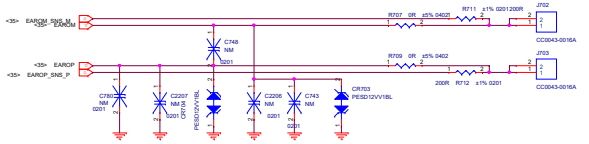

Bottom fpc Connector

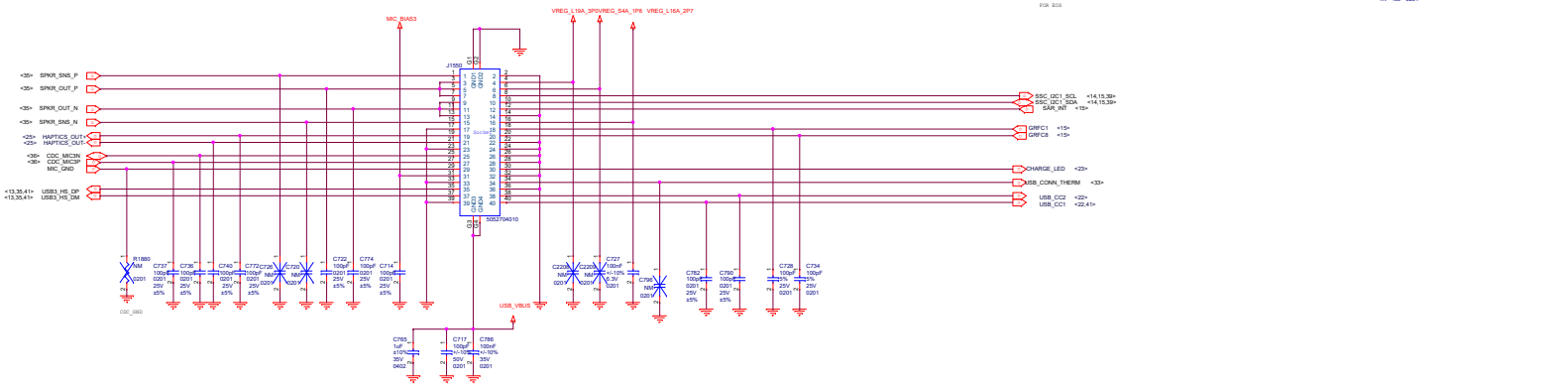

File:	E10		
Size: A1	Document Number: AUDIO		Rev: P0
Date: Monday, May 14, 2018	Sheet 35 of 40		

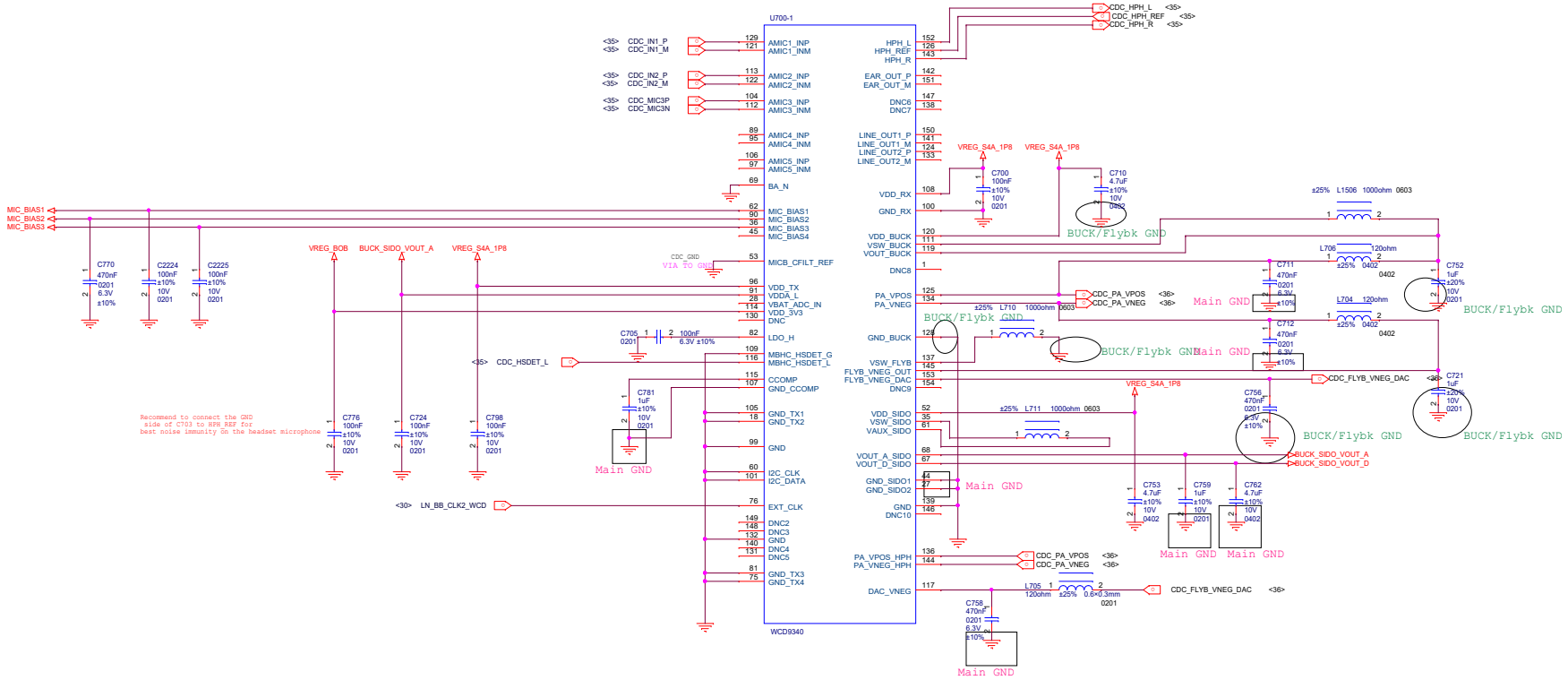

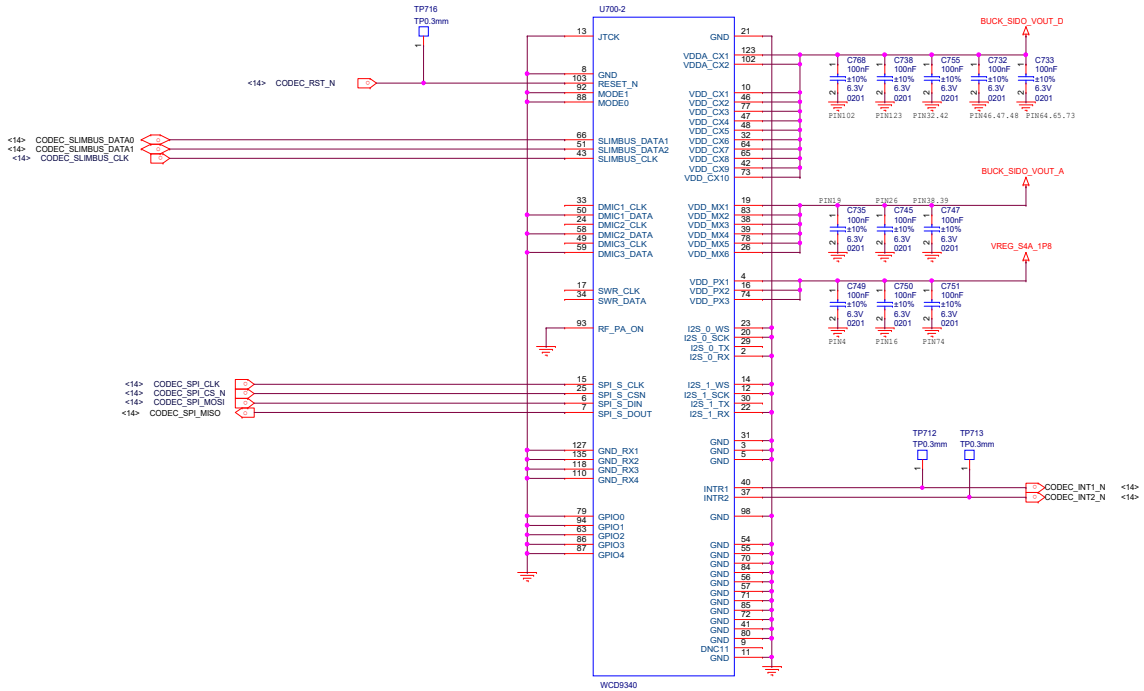

Title	E10		
Size A2	Document Number WCD9335		Rev P0
Date: Friday, May 11, 2018	Sheet 36 of 40		

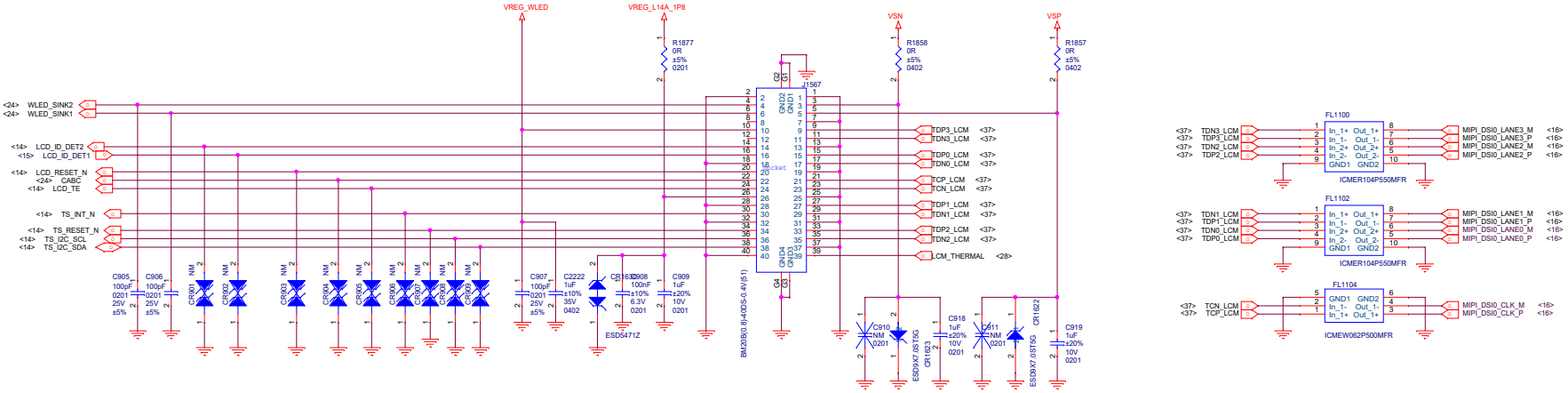

Title	E10		
Size A2	Document Number LCD		Rev P0
Date: Friday, May 11, 2018	Sheet 37 of 40		

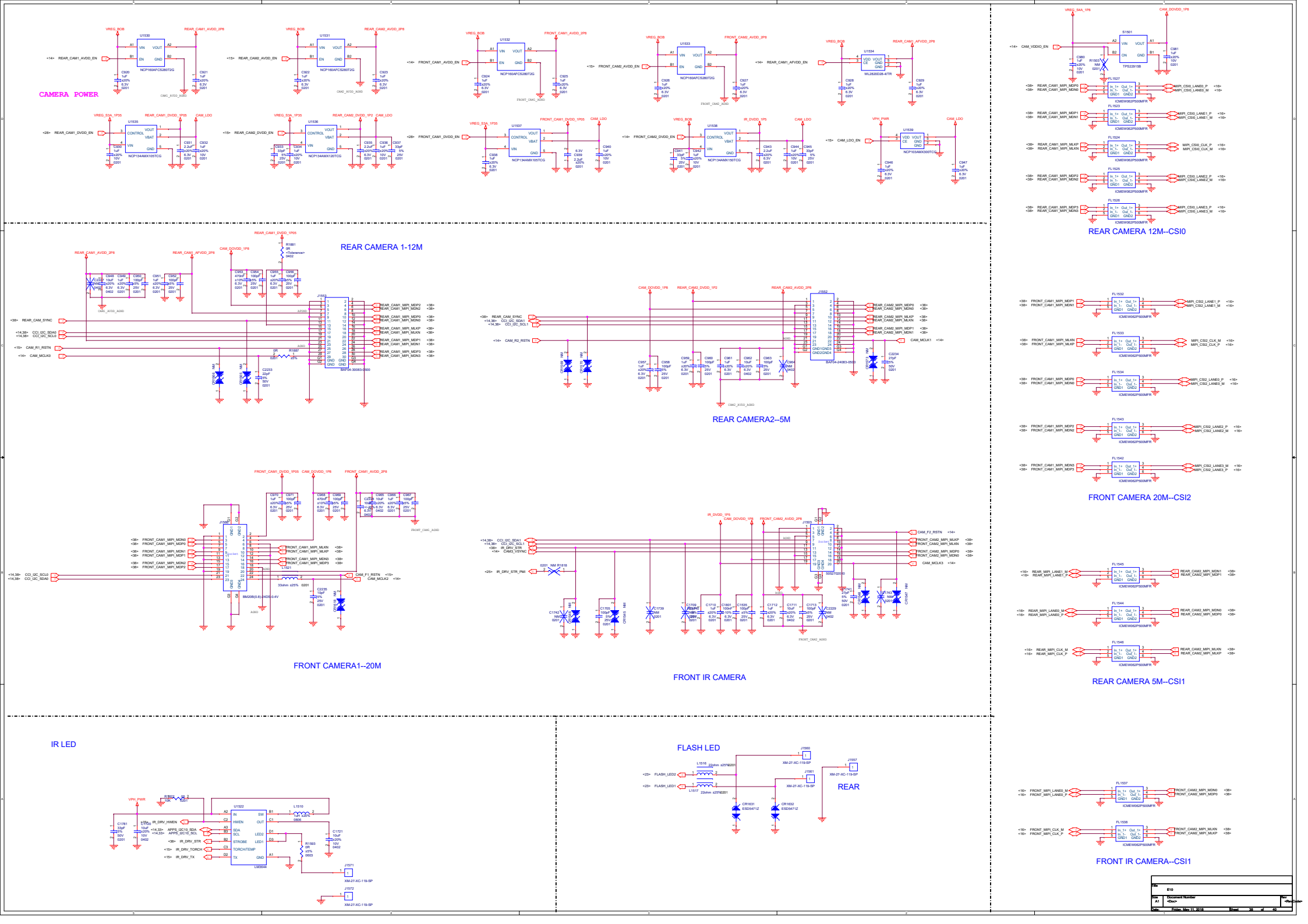
CAMERA POWER
REAR CAMERA 1-12M
REAR CAMERA2--5M
FRONT CAMERA1--20M
FRONT IR CAMERA
IR LED
FLASH LED
REAR
REAR CAMERA 12M--CSI0
FRONT CAMERA 20M--CSI2
REAR CAMERA 5M--CSI1
FRONT IR CAMERA--CSI1
E10
A1
Friday, May 11, 2018
38
40

P-sensor

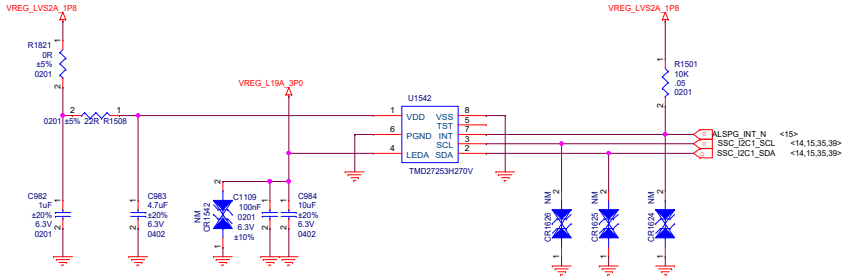

G+G

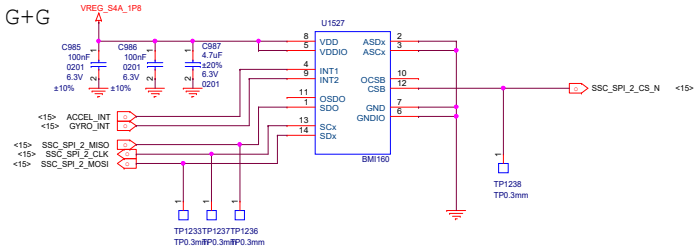

COMPASS

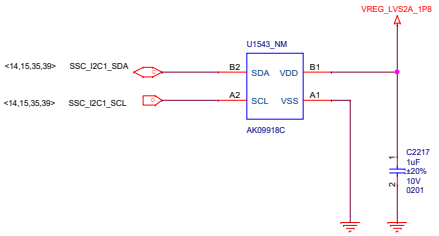

FINGERPRINT

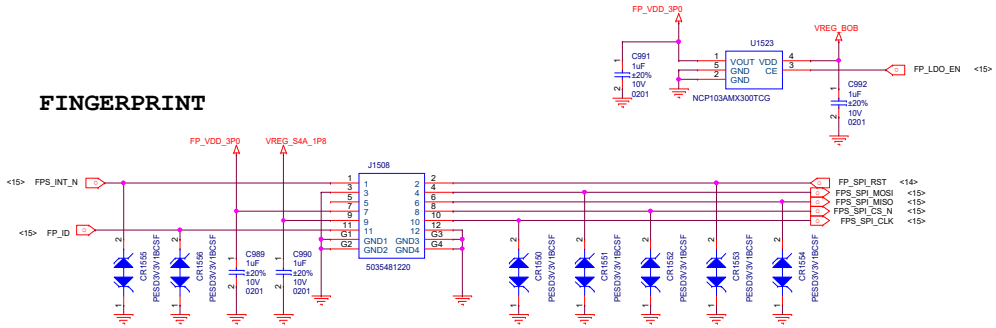

COMPASS

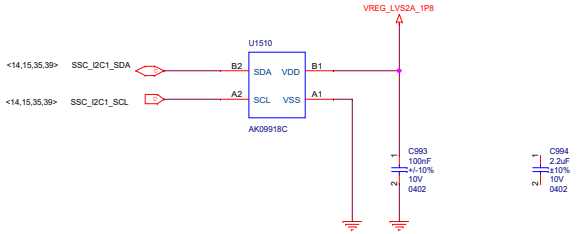

HALL

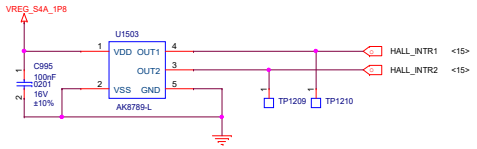

Title	E10	
Size A2	Document Number SENSOR	Rev P0
Date:	Sheet 39 of 40	

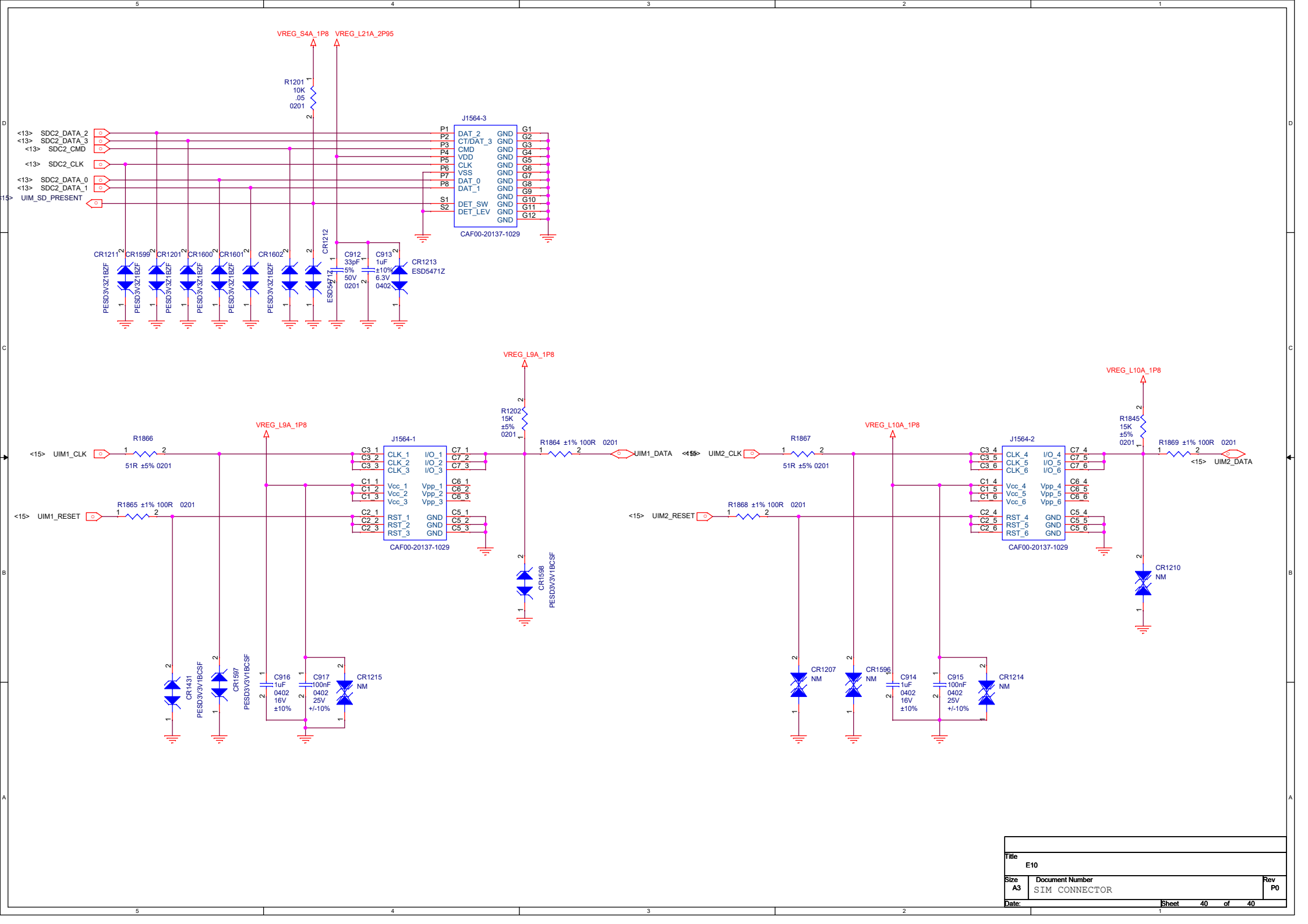
VREG_S4A_1P8
VREG_L21A_2P95
R1201
10K
.05
0201
J1564-3
<13> SDC2_DATA_2
<13> SDC2_DATA_3
<13> SDC2_CMD
<13> SDC2_CLK
<13> SDC2_DATA_0
<13> SDC2_DATA_1
<15> UIM_SD_PRESENT
P1 DAT_2
P2 CT/DAT_3
P3 CMD
P4 VDD
P5 CLK
P6 VSS
P7 DAT_0
P8 DAT_1
S1 DET_SW
S2 DET_LEV
GND
G1 G2 G3 G4 G5 G6 G7 G8 G9 G10 G11 G12
CAF00-20137-1029
CR1211 CR1599 CR1201 CR1600 CR1601 CR1602
PESD3V3V21BZF
CR1212
ESD5471Z
C912
33pF
5%
50V
0201
C913
1uF
±10%
6.3V
0402
CR1213
ESD5471Z
VREG_L9A_1P8
R1202
15K
±5%
0201
R1866
51R ±5% 0201
<15> UIM1_CLK
R1865 ±1% 100R 0201
<15> UIM1_RESET
J1564-1
CLK_1 CLK_2 CLK_3
I/O_1 I/O_2 I/O_3
Vcc_1 Vcc_2 Vcc_3
Vpp_1 Vpp_2 Vpp_3
RST_1 RST_2 RST_3
GND
C7_1 C7_2 C7_3
C6_1 C6_2 C6_3
C5_1 C5_2 C5_3
C1_1 C1_2 C1_3
C2_1 C2_2 C2_3
C3_1 C3_2 C3_3
CAF00-20137-1029
R1864 ±1% 100R 0201
UIM1_DATA
CR1598
PESD3V3V1BCSF
CR1431
PESD3V3V1BCSF
CR1597
PESD3V3V1BCSF
C916
1uF
0402
16V
±10%
C917
100nF
0402
25V
+/-10%
CR1215
NM
VREG_L10A_1P8
R1845
15K
±5%
0201
R1867
51R ±5% 0201
<15> UIM2_CLK
R1868 ±1% 100R 0201
<15> UIM2_RESET
J1564-2
CLK_4 CLK_5 CLK_6
I/O_4 I/O_5 I/O_6
Vcc_4 Vcc_5 Vcc_6
Vpp_4 Vpp_5 Vpp_6
RST_4 RST_5 RST_6
GND
C7_4 C7_5 C7_6
C6_4 C6_5 C6_6
C5_4 C5_5 C5_6
C1_4 C1_5 C1_6
C2_4 C2_5 C2_6
C3_4 C3_5 C3_6
CAF00-20137-1029
R1869 ±1% 100R 0201
<15> UIM2_DATA
CR1210
NM
CR1207
NM
CR1596
NM
C914
1uF
0402
16V
±10%
C915
100nF
0402
25V
+/-10%
CR1214
NM
Title
E10
Size
A3
Document Number
SIM CONNECTOR
Rev
P0
Date:
Sheet 40 of 40

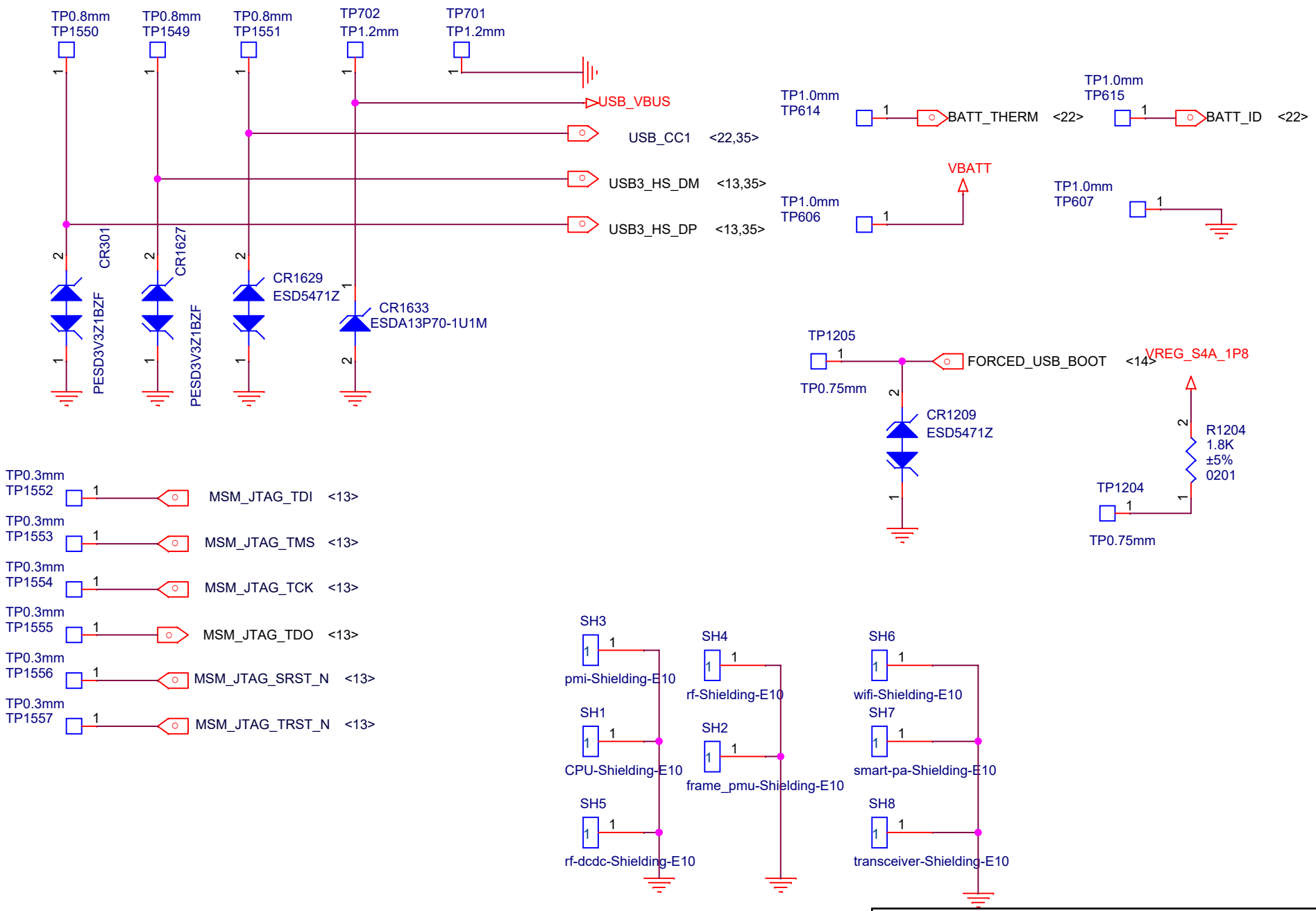

Title	E10	
Size A	Document Number <Doc>	Rev <RevCode>
Date: Friday, May 11, 2018	Sheet 41 of 41	